II.A.7 Pressurized Steam Reforming of Bio-Derived Liquids for Distributed Hydrogen Production

Shabbir Ahmed (Primary Contact),
Dennis Papadias, Sheldon H.D. Lee
Argonne National Laboratory
9700 South Cass Avenue
Argonne, IL 60439
Phone: (630) 252-4553; Fax: (630) 972-4553
E-mail: ahmeds@anl.gov

DOE Technology Development Manager:
Rick Farmer
Phone: (202) 586-1623; Fax: (202) 586-2373
E-mail: Richard.Farmer@ee.doe.gov

Project Start Date: October 1, 2005
Project End Date: Project continuation and direction determined annually by DOE

Objectives

The objective of this work is to develop an efficient distributed hydrogen production process by:

- Using bio-derived liquids, such as ethanol, as the feedstock.
- Using pressurized steam reforming to reduce the hydrogen compression penalty.

Technical Barriers

This project addresses the following technical barriers from the Hydrogen Production section of the Hydrogen, Fuel Cells and Infrastructure Technologies Program Multi-Year Research, Development and Demonstration Plan:

(A) Fuel Processor Capital Costs
(E) Greenhouse Gas Emissions
(H) System Efficiency

Technical Targets

This project is conducting fundamental studies to define feasible pathways, that can meet DOE targets for efficiency, using the pressurized reforming of bio-derived liquids such as ethanol and glycerol, through the use of systems analysis and experimental evaluations of advanced reactor concepts that combine reactions with separations. The following are some of the relevant DOE targets:

Characteristics	Units	2012 Target	2017 Target
Production Unit Energy Efficiency	% (LHV)	72.0	65-75
Total Hydrogen Cost	$/gge	3.80	<3.00

LHV - lower heating value

Accomplishments

- Two process models were set up to compare the efficiencies and their relative merits when the process is conducted at elevated (> 20 atm) pressures:
  - A catalytic steam reformer (SR) followed by a pressure swing adsorption (PSA) process.
  - A catalytic SR conducted in a (H_2-permeating) membrane reactor (steam reformer membrane, SR-M).
- Demonstrated process options and conditions where hydrogen-permeating membrane reactor systems can exceed the efficiency achievable with the SR-PSA system.
- Identified the key challenges for the SR-M systems that can be addressed through advances in the membrane technology, i.e., flux and cost.

✧ ✧ ✧ ✧ ✧

Introduction

Distributed hydrogen production facilities will need to store and transport hydrogen at pressures in excess of 400 atm. Existing production pathways based on natural gas produce compressed hydrogen in two compression steps: 1) the natural gas feed is compressed to the reforming pressures (10-20 atm), and 2) the final product hydrogen from the PSA unit is then compressed to the delivered pressure of ~400 atm. The energy needed for the compression can be equivalent to a significant fraction of the LHV of the product hydrogen. In this project, we are investigating the option of steam reforming a bio-derived liquid (e.g., ethanol, etc.) at elevated (>20 atm) pressures, since this pathway can greatly reduce the energy cost of hydrogen compression by feeding in a pressurized liquid stream into the reformer.

The challenges of high-pressure reforming of ethanol include (1) the thermodynamic equilibrium that favors higher methane and lower hydrogen yields at high pressures (at a given temperature and steam-to-

carbon ratio), and (2) the potentially higher capital cost associated with pressurized equipment. On the other hand, the high-pressure process offers the advantages of a more compact system (greater reactivity) and higher driving force for pressure-based separation/purification systems. The system design needs to balance these diverse characteristics to be able to deliver the hydrogen at the final pressure at high efficiencies and cost. This project has experimentally established the effect of pressure, temperature, space velocity and steam-to-carbon ratio on the product yields during the steam reforming process. The beneficial effect of hydrogen extraction through a membrane on the yields has been quantified. Alternative processes based on novel approaches, such as the use of membranes (for H_2, CO_2, O_2, etc.), or energy recovery (thermal integration, turbines, etc.) are explored in this project to identify promising options and addressing technical challenges.

Approach

A systems analysis was conducted to evaluate the benefits of a process that conducts the steam reforming of a bio-derived liquid (ethanol was used in this study) in a high-pressure catalytic reformer fitted with a hydrogen transport membrane (SR-M). The efficiency of such a system was compared to an ethanol fueled hydrogen production plant, similar to industrial systems that are fueled by natural gas for commercial hydrogen production and supply. The reference system consists of a catalytic SR followed by a PSA system for hydrogen purification (SR-PSA).

The models for the two systems were set up using MATLAB and equilibrium calculations. The calculations for the reformer in the SR-M system were done by setting up a physical model of the reactor that allowed the spatial characterization of the reaction and hydrogen permeation as functions of the temperature and partial pressures on both sides of the membranes.

Results

The system diagram for the reference case, SR-PSA, is shown in Figure 1. The ethanol-water mixture is vaporized and preheated before entering into the steam reformer. The products (reformate) exits with the species at chemical equilibrium at the reactor temperature. The reformate is cooled to 375°C and reacted in the water-gas shift (WGS) reactor. After cooling and dehumidification, the reformate enters the pressure swing adsorption unit at 40°C. The high purity hydrogen emerges from the PSA at the system pressure (the SR, WGS, PSA are all at the same pressure) and is then compressed to the final pressure of 425 atm. The percent hydrogen recovery in the PSA was specified between 70-80%. The tail gas containing the carbon oxides and methane are combusted in the burner to generate heat for the reformer. If the energy content in the tail gas is insufficient to meet the needs in the reformer, supplemental ethanol is combusted in the burner. The efficiencies for the system (for hydrogen delivered to the final pressure of 425 atm) have been defined as,

$$Efficiency,\% = \frac{LHV_{H2} \times 100}{LHV_{EtOH} + \left(\frac{Energy_{Electrical} + Energy_{Compressor}}{\eta_{grid}} \right)}$$

where η_{grid}, the efficiency of the grid electricity, was assumed to be 32.5% [1].

The schematic for the SR-M system is shown in Figure 2. As in the reference case, the ethanol and water streams are fed into the reformer. The membrane in this reformer separates a fraction of the hydrogen from the reforming zone, where the actual moles of hydrogen that permeate across depend on the hydrogen partial pressures across the membrane and the available surface area. The raffinate stream, containing the remaining hydrogen, carbon oxides, hydrocarbons, and steam are expanded in a turbine and then combusted in the burner to generate heat for the reformer. The permeate side pressure is an assigned (assumed) parameter. The permeated hydrogen is cooled and then compressed to the final pressure. The turbine power available from the raffinate expansion is used to offset the power needed to compress the hydrogen.

Figure 3 plots the efficiency of the SR-M as a function of the reactor pressure, at two reactor temperatures, 650°C and 800°C. The efficiencies are found to increase with pressure and can approach 70% at 80 atm and 800°C. These results reflect the assumptions/constraints of 50 ft^2 membrane area, 250 scfh/ft^2 hydrogen flux. For comparison, the reference system was exercised at two benchmark points, as shown in Table 1. These two benchmark points are also represented (dotted lines) in Figure 3, showing that the advantage of the membrane system becomes more evident at the higher temperatures and pressures.

TABLE 1. Efficiencies at two benchmark scenarios for the reference system (SR-PSA)

Bench Mark	S/C	T	P	H_2 Recovery in PSA	Efficiency at P (atm)	Efficiency at 425 atm
		°C	atm	%	%	%
A (SR-PSA Ref.1)	3.4	750	8.0	70	70.1	59.9
B (SR-PSA Ref.2)	3.0	800	17.5	80	74.4	65.2

Qualitatively, the membrane system is simpler in that it does not require a WGS reactor and the PSA unit

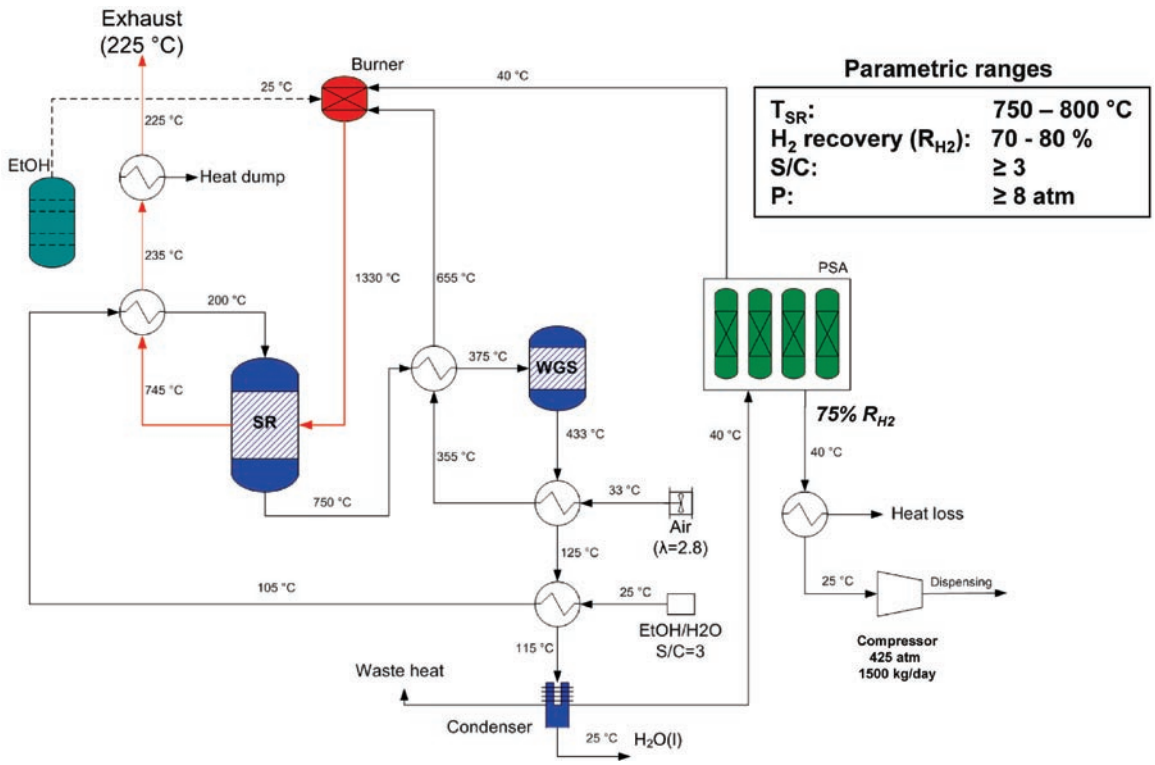

FIGURE 1. Schematic of the reference case system (SR-PSA) based on the steam reforming of a bio-derived liquid.

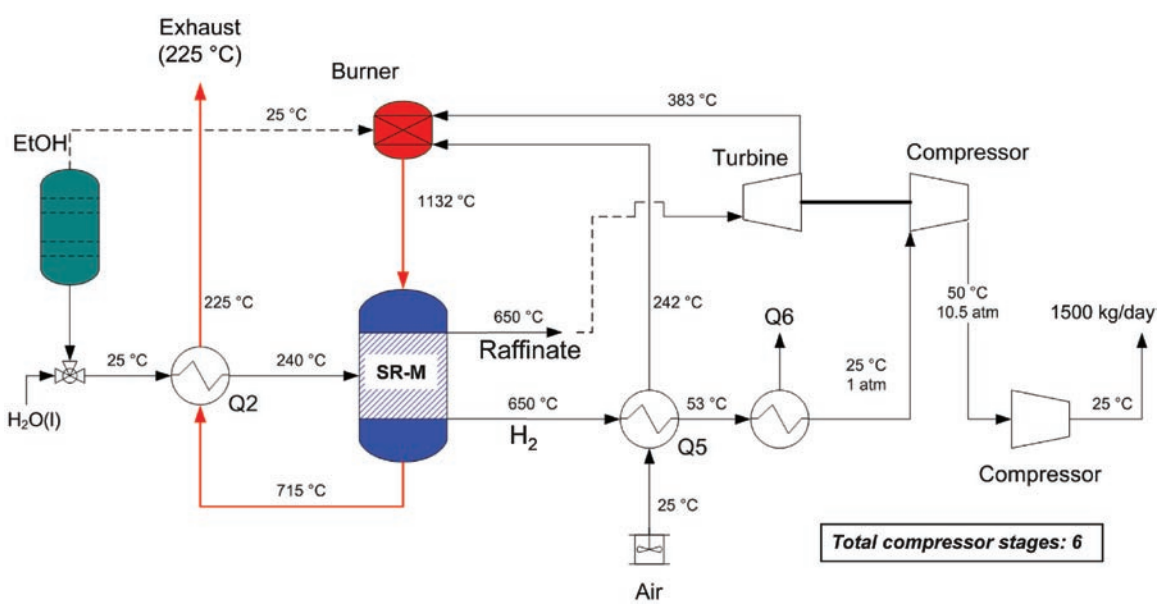

FIGURE 2. Schematic of the membrane reactor system (SR-M) based on the steam reforming of a bio-derived liquid in a hydrogen permeating membrane reactor.

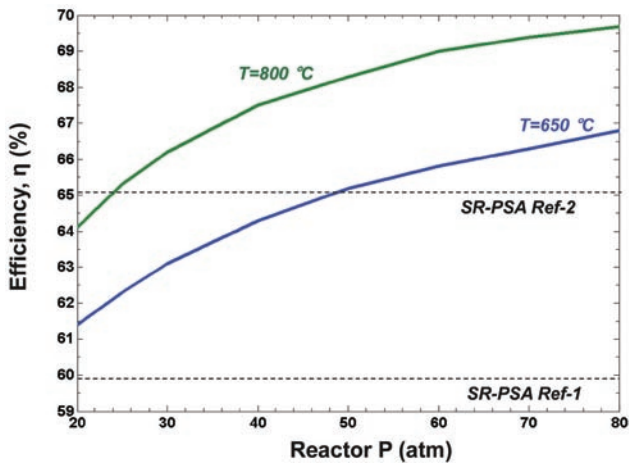

FIGURE 3. Total system efficiency for the production of hydrogen (425 atm) from ethanol.

and, barring any pin holes in the membrane, delivers the highest purity hydrogen. The disadvantage is that the hydrogen on the permeate side is at a lower pressure and has to be recompressed. Nevertheless, the efficiency calculations show that this loss can be more than offset at the higher temperatures and pressures. Practical issues such as the durability and cost of the reactor and membrane, especially at the high temperature-pressure combinations, are issues that will require resolution.

Conclusions and Future Directions

- A systems analysis was conducted to evaluate the efficiency potential of a process based on the high pressure steam reforming membrane reactor (SR-M), for the production of hydrogen from bio-derived liquids.
- Even though the permeated hydrogen is at a lower pressure, a turbo-compressor can be used to recover the compression energy from the raffinate.
- The SR-M system has higher efficiencies (than the SR-PSA benchmarks), especially at the higher temperatures and pressures.
- The analysis will continue to evaluate other process options, especially those that maintain the hydrogen at the elevated operating pressure. These include the transport of CO_2 across a membrane within the reformer to offset the negative aspects of pressurized reforming and reformate purification using PSA. The most favorable approach will then be pursued further by addressing the key technical challenge that limits the pathway to industry participation and commercial feasibility.

FY 2009 Publications/Presentations

1. Lee, S.H.D., Papadias, D., Wu, C-H, Ahluwalia, R.K, "Pressurized Steam Reforming of Bio-Derived Liquids for Distributed Hydrogen Production," poster presentation at the 2008 Fuel Cell Seminar, Phoenix, AZ.

References

1. Ahluwalia, R.K., Hua, T.Q., Peng, J.-K., "Fuel cycle efficiencies of different automotive on-board hydrogen storage options," International J of Hydrogen Energy, 32 (2007) 3592 – 3602.