III.9 Development of a Centrifugal Hydrogen Pipeline Gas Compressor

Francis A. Di Bella, P.E.
Concepts ETI, Inc., d.b.a. Concepts NREC
285 Billerica Road, Suite 102
Chelmsford, MA 01824-4174
Phone: (781) 937-4718
Email: fdibella@conceptsnrec.com

DOE Managers
Erika Sutherland
Phone: (202) 586-3152
Email: Erika.Sutherland@ee.doe.gov
Katie Randolph
Phone: (720) 356-1759
Email: Katie.Randolph@ee.doe.gov

Contract Number: DE-FG36-08GO18059

Subcontractors
- Texas A&M University, College Station, TX
- HyGen Industries, Eureka, CA

Project Start Date: June 1, 2008
Project End Date: December, 2014

Overall Project Objectives

- Develop and demonstrate an advanced centrifugal compressor system for high-pressure hydrogen pipeline transport to support DOE's hydrogen infrastructure targets. The technical targets of the compressor are:
  1. Delivery of 100,000 to 1,000,000 kg/day of 99.99% hydrogen gas.
  2. Compression from 350 psig to 1,000 psig or greater.
  3. Initial installed system equipment cost of less than $9M (compressor package of $5.4M) for 240,000 kg/day system.
- Reduce package footprint and improve packaging design.
- Reduce maintenance cost to below 3% of total capital investment. Increase system reliability to avoid purchasing redundant systems.

Fiscal Year (FY) 2014 Objectives

- Procure custom gearbox
- Assemble single-stage prototype components
- Prepare test plan for prototype testing
- Coordinate the use of the prototype as a testing platform in a national lab doing research with hydrogen

Technical Barriers

This project addresses the following technical barriers from the Delivery section (3) of the Fuel Cell Technologies Office Multi-Year Research, Development, and Demonstration Plan [1]:

(B) Reliability and Costs of Hydrogen Compression

Technical Targets

The project has met the following DOE targets as presented the Fuel Cell Technologies Office Multi-Year Research, Development, and Demonstration Plan [1] (see Table 1).

The original DOE proposal requirements were satisfied with the detailed design of a pipeline hydrogen compressor that utilizes all state-of-the-art and commercially available

TABLE 1. Progress towards Meeting Technical Targets for Delivery of Hydrogen via Centrifugal Pipeline Compression

Progress Towards Meeting Technical Targets for Delivery of Hydrogen via Centrifugal Pipeline Compression				
{Note: Letters correspond to DOE's 2007 Technical Plan-Delivery Sec. 3.2-page 16}				
Characteristic	Units	DOE Target	Project Accomplishment	STATUS
Hydrogen Efficiency (f)	[btu/btu]	98%	98%	Objective Met
Hydrogen Capacity (g)	kg/day	100,000 to 1,000,000	240,000	Objective Met
Hydrogen Leakage (d)	%	< .5	0.2 (per Flowserve Shaft Seal Spec)	Objective Met
Hydrogen Purity (h)	%	99.99	99.99 (per Flowserve Shaft Seal Spec)	Objective Met
Discharge Pressure (g)	psig	>1000	1285	Objective Met
Comp. Package Cost (g)	$M	6.0 +/- 1	4.5 +/- 0.75	Objective Met
Main. Cost (Table 3.2.2)	$/kWhr	0.007	0.005 (per *CN* Analysis Model)	Objective Met
Package Size (g)	sq. ft.	350 (per HyGen Study)	260 (per *CN* Design)	Objective Met
Reliability (e)	# Sys.s Req.d	Eliminate redundent system	Modular sys.s with 240K kg/day with no redundency req.d	Objective Met

components, including: high-speed centrifugal compressor, gearbox, intercooler, tilt-pad bearings, and oil-free dry gas shaft seal and controls.

Accomplishments for Phases I and II (completed from 2008 to 2011) and Phase III (in progress)

Developed computer models to aid in analysis of hydrogen compressor:

- System Cost and Performance Model
  - Identifies hydrogen compressor package performance and component cost with respect to a variety of compressor-gearbox configurations
- System Reliability and Maintenance Cost Model
  - Estimates comparative reliabilities for piston and centrifugal compressors for pipeline compressors developed
    - Failure mode and effects analysis for component risk and reliability assessment
  - Estimates operation and maintenance costs for compressor system
    - Uses Federal Energy Regulatory Commission operation and maintenance database as the basis for determining the maintenance costs for a centrifugal compressor
- Anti-surge algorithm developed to assist in controls analysis and component selection of preliminary design (completed) and detailed design of pipeline compressor module (in progress), including:
  - Compressor design conditions confirmed by project collaborators
    - P_{inlet} = 350 psig, P_{outlet} = 1,285 psig; flow rate = 240,000 kg/day
    - A six-stage, 60,000 revolutions per minute, 3.6 (max) pressure ratio compressor with a mechanical assembly of integrally geared, overhung compressor impellers
    - Stress analysis completed
    - Volute (compressor housing) design completed for two-stage prototype
    - Rotordynamics completed to verify shaft-seal-bearing integrity at operating speeds
- Completed critical component development (compressor rotor, shaft seal, bearings, gearing, safety systems) and specifications for near-term manufacturing availability
- Completed detailed design and cost analysis of a complete pipeline compressor and a laboratory-scale prototype for future performance lab verification testing
- Procured all remaining system components for one-stage prototype compressor including the longest lead item: the single-speed step gearbox
- Completed the pre-assembly of the hydrogen compressor to determine interferences

✧ ✧ ✧ ✧ ✧

INTRODUCTION

The DOE has prepared a Multi-Year Research, Development, and Demonstration Plan to provide hydrogen as a viable fuel for transportation after 2020, in order to reduce the consumption of limited fossil fuels in the transportation industry. Hydrogen fuel can be derived from a variety of renewable energy sources and has a very high BTU energy content per kg, equivalent to the BTU content in a gallon of gasoline. The switch to hydrogen-based fuel requires the development of an infrastructure to produce, deliver, store, and refuel vehicles. This technology development is the responsibility of the Production and Delivery Programs within the DOE. The least expensive delivery option for hydrogen to refueling stations in a mature market would be via pipelines. Pipelines use compressor stations to maintain the flow of gas. Compressors account for a significant portion of the delivery cost, and the DOE has therefore set a goal that compression (capital, installation, and operation) accounts for <$2/gasoline gallon equivalent by 2020.

The delivery cost target can be met if the compressor system can be made more reliable (to reduce maintenance costs), more efficient (to reduce operation costs), and be a smaller, more complete modular package (to reduce the compressor system equipment, shipment, and its installation costs). To meet these goals, the DOE has commissioned Concepts NREC with the project entitled: The Development of a Centrifugal Hydrogen Pipeline Gas Compressor.

APPROACH

A three-phase approach has been programmed to implement the technical solutions required to complete a viable hydrogen compressor for pipeline delivery of hydrogen. The three phases include: Phase I - Preliminary Design, Phase II - Detailed Design of Both a Full-scale and Prototype Hydrogen Compressor, and Phase III - The Assembly and Testing of the Prototype Compressor.

The technical approach used by Concepts NREC to accomplish these goals is to utilize state-of-the-art aerodynamic/structural analyses to develop a high-performance centrifugal compressor system for pipeline service. The centrifugal-type compressor is able to provide high pressure ratios under acceptable material stresses for relatively high capacities—flow rates that are higher than

what a piston compressor can provide. Concepts NREC's technical approach also includes the decision to utilize commercially available, and thus, proven bearings, shaft seal technology, and high-speed gearing to reduce developmental risk and increase system reliability at a competitive cost.

The engineering challenge to implement this technical approach is to design a compressor stage that maximizes pressure ratio and thermodynamic efficiency per stage, and minimizes the number of stages and the impeller diameter. The largest constraint to the design is the stress capability of the impeller material. This constraint is further aggravated by the need for the material selection to account for the effects of hydrogen embrittlement. The selection of a rotor material that can enable the high tip speeds to be achieved while avoiding damage from hydrogen embrittlement was determined to be the major technical challenge for the project.

Concepts NREC has met all of these engineering challenges in order to provide a pipeline compressor system that meets DOE's specifications for near-term deployment.

The project team includes researchers at Texas A&M, led by Dr. Hong Liang, who are collaborating with Concepts NREC to confirm the viability of aluminum alloys for this compressor application. Also providing unfunded assistance were several national labs, including: Sandia National Laboratories (fracture mechanics testing; Chris San Marchi), Savannah River National Laboratory (specimen "charging" with hydrogen plus tensile testing with hydrogen; Andrew Duncan and Thad Adams), and Argonne National Laboratory (George Fenske).

RESULTS

The engineering analysis has resulted in the design of the pipeline compressor package shown in Figure 1. The complete modular compressor package is 29 ft long x 10 ft tall x 6 ft wide at the base x 8 ft wide at the control panel, which is approximately one-half of the footprint of a piston-type, hydrogen compressor.

The compressor selection uses six stages, each operating at 60,000 rpm, with an impeller tip speed of less than 2,100 ft/s. Each compressor rotor and drive shaft is 8 inches in diameter and has an overall stage efficiency of between 79.5 and 80.5%, for an overall compressor efficiency of 80.3%. The first and last stages have a slightly different length, which helps to improve the rotordynamics for the last stages. Each compressor impeller is a single overhung

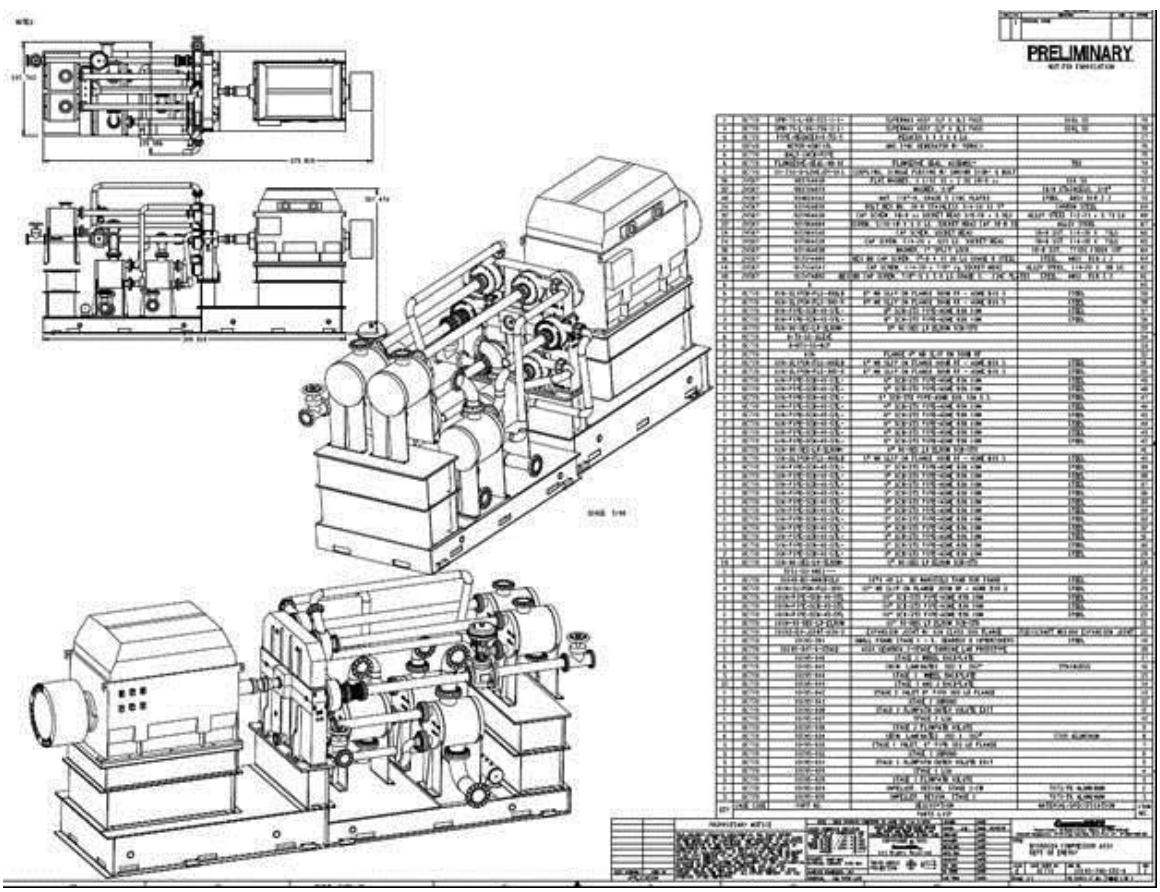

FIGURE 1. Pipeline Hydrogen Centrifugal Compressor: 240,000 kg/day; 350 to 1,285 psig

(cantilevered) impeller attached to a drive shaft that includes a shaft seal, bearing, and drive pinion (Figure 2) integrated with the gearbox drive. The impeller rotor is designed without a bored hub, in order to reduce the hub "hoop" stresses. This requires the impeller to be mechanically attached to the high-strength steel alloy, a drive shaft with a patented design attachment system that enables the rotor to be removed from the gearbox without removing the drive shaft, so it does not disturb the shaft seal and bearings. A gas face seal will provide the isolation of the hydrogen from the lubricating oil. The 1,400 hp per stage can be sustained by using two tilting pad hydrodynamic bearings on either side of a 2.5-inch-long drive-pinion gear. The face seal and bearings are commercially available from Flowserve and KMC, respectively. The pinion and bull gear is part of a custom gearbox manufactured by Artec Machine Systems representing NOVAGEAR (Zurich, Switzerland) and utilizes commercially available gear materials that are subjected to stresses and pitch line speeds that meet acceptable engineering practice.

The material chosen for the compressor rotor and volute is an aluminum alloy: 7075-T6 alloy. The choice is based on its mechanical strength-to-density ratio or (S_{yield}/ρ), which can be shown to be a characteristic of the material's ability to withstand centrifugal forces. This aluminum alloy has a strength-to-density ratio that is similar to titanium and high-strength steels at the 140°F (max) operating temperatures that will be experienced by the hydrogen compressor. However, unlike titanium and most steels, aluminum is recognized by the industry as being very compatible with hydrogen.

Aluminum also helps to reduce the weight of the rotor, which leads to an improved rotordynamic stability at the 60,000 rpm operating speed. A rotor stability and critical speed analysis has confirmed that the overhung design is viable. The first stage compressor rotor has been manufactured and successfully spun to 110% of its 60,000 rpm operating speed. A subsequent fluorescent penetrant inspection and strain measurements of the rotor after the spin test indicated no creep or micro-crack design flaws as a result of the test.

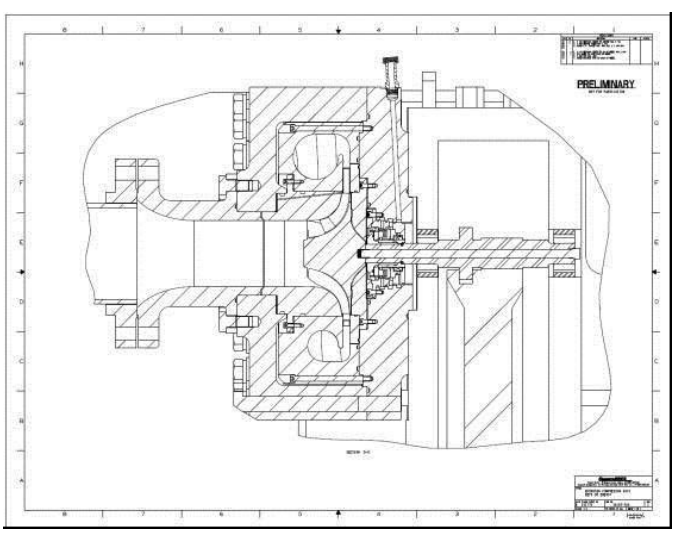

FIGURE 2. Mechanical Detailed Assembly of One-Stage, Prototype Compressor

The one-stage prototype compressor has been chosen for laboratory testing in Phase III of the project. The laboratory prototype is shown in Figure 3. The compressor components are being manufactured, and the balance of the system components are being purchased. The system will be assembled and tested in the fall of 2014.

CONCLUSIONS AND FUTURE DIRECTIONS

The advanced, six-stage, intercooled, centrifugal compressor-based system can provide 240,000 kg/day of hydrogen from 350 to 1,285 psig high (6,300 kWe) for pipeline-grade service. The original DOE proposal requirements were satisfied with the detailed design of a pipeline hydrogen compressor that utilizes all state-of-the-art and commercially available components, including: high-speed centrifugal compressor, gearbox, intercooler, tilt-pad bearings, oil-free dry gas shaft seal and controls. As a result of the sponsored research and development, a pipeline-capacity, hydrogen centrifugal compressor can be made available now to meet the hydrogen infrastructure needs of the future!

OBJECTIVES FOR THIS YEAR

Phase III System Component Procurement, Construction, and Validation Testing

Continue component procurement for the one-stage prototype hydrogen compressor system

- Complete assembly of the one-stage centrifugal compressor system (Figure 4)
- Conduct mechanical shakedown and aerodynamic testing and assessment of mechanical integrity of the compressor system
- Prepare a plan for field evaluation of the prototype compressor, including deployment in a national laboratory or a university research laboratory

REFERENCES

1. DOE Multi-Year Research, Development, and Demonstration Plan.

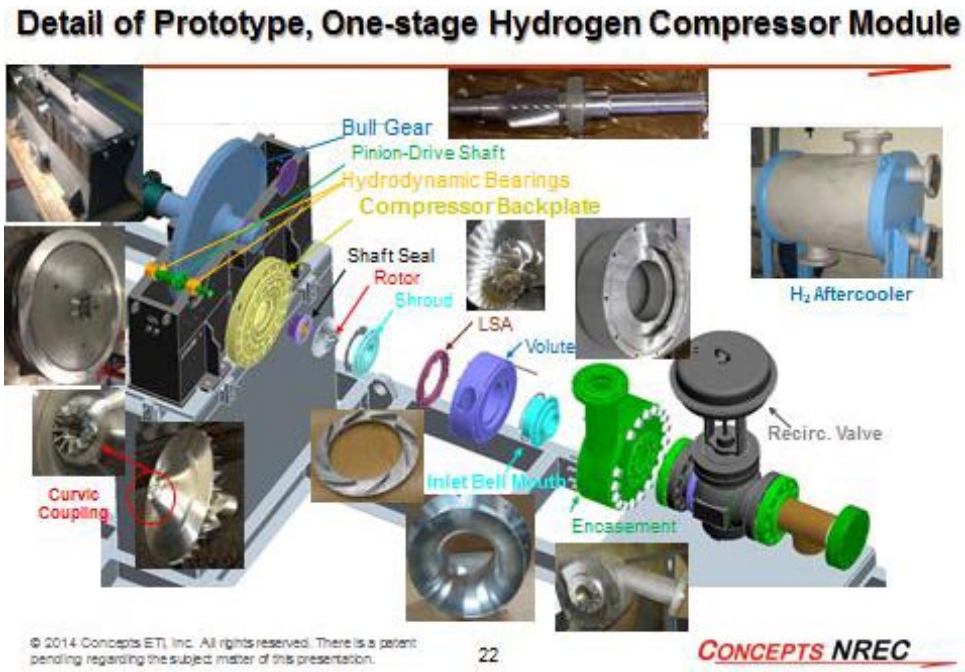

FIGURE 3. Detailed Specification for the One-Stage Prototype Compressor

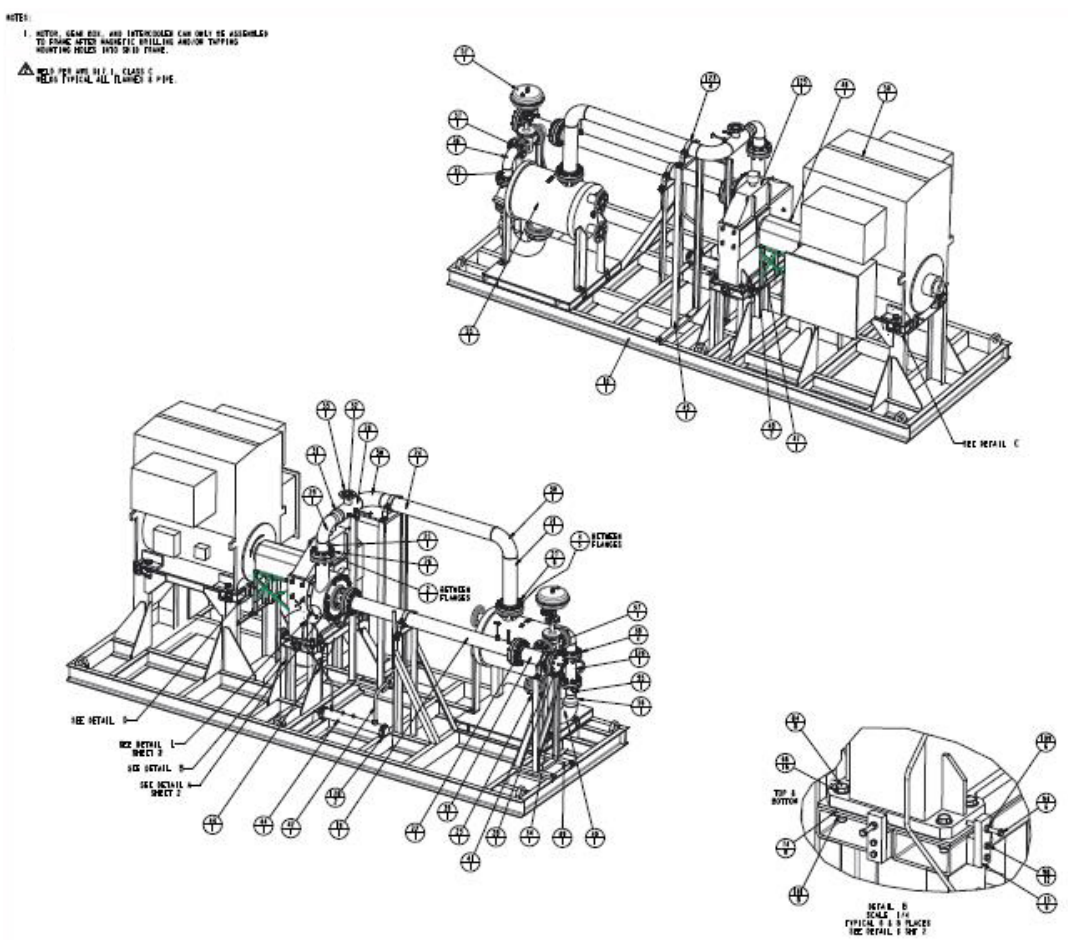

FIGURE 4. Detail of Prototype, One-Stage Hydrogen Compressor Module