A Total Turbomachinery Resource

CONCEPTS NREC

2011 DOE Hydrogen Program Merit Review

Development of a Centrifugal Hydrogen Pipeline Gas Compressor

Mr. Francis Di Bella, P.E. and Dr. Colin Osborne
Concepts NREC (*CN*)

May 10, 2010

Project ID#: PD017

This presentation does not contain any proprietary, confidential, or otherwise restricted information

Project Overview

Timeline

- **Project Start: June 1, 2008**
- **Project End: May 31, 2011**
- **Percent Complete: Ph. 1 and Ph. 2 - 100%; Ph. 3 in Progress)**

Budget

- **Total Project Funding**
  - DOE Share: $3,352,507
  - Contractor Share: $850,055
- **Funding Received in FY10**
  - $848,680
- **Funding for FY11 (Phase III)**
  - Planned $830,000

Barriers/Tech. Objectives

- Pipeline delivery of pure (99.99%) hydrogen at <$1/GGE with 98% hydrogen efficiency
- Reduce Initial Capital Equipment and O&M Cost
- Reduce Compressor Module Footprint & Increase Reliability of hydrogen Piston Compressors

Project Lead

- Concepts NREC (Woburn, MA, and Wilder, VT)

Project Partners

- Praxair (Prototype Test Site, Industrial User/ Engineering Assistance)
- Texas A&M University (TAMU) (Materials Testing)
- HyGen Industries (Hydrogen Industry Consultant)

Technical Collaboration

- Sandia National Lab, Argonne National Lab, Savannah River National Lab
- ABB Motor & valving, Artec Machine Systems, KMC, Flowserve, Tranter HX

Hydrogen Pipeline Compressor Project Objectives - Relevance

- **Demonstrate Advanced Centrifugal Compressor System for High-pressure Hydrogen Pipeline Transport to Support[1]**
  - Delivery of 100,000 to 1,000,000 kg/day of pure hydrogen to forecourt station at less than $1/GGE with less than 0.5% leakage and with pipeline pressures of 1200^{+} psig
  - Reduction in initial installed system equipment cost to less than $6.3 million which is the uninstalled cost for a hydrogen pipeline based on DOE's HDSAM 2.0 Economics Model
  - Reduction in Operating & Maintenance Costs via improved reliability
    - ~ DOE's Model also indicates $O&M cost of 3% of installed cost per year or $0.01/kWhr by 2017
    - ~ Improved reliability eliminates the need for system redundancies
  - Reduction in system footprint

1. Reference: Delivery Section (Sec. 3.2) of the *"Hydrogen, Fuel Cells and Infrastructure Technologies Program Multi-year Research, Development,and Demonstration Plan"*

Three-phase Program Approach

Phase I Initial Design (COMPLETED) (06/2008 to 12/2009)	Phase II Detailed Design (COMPLETED) (01/2010 to 12/2010)	Phase III System Validation Testing (IN PROGRESS) (01/2011 to 08/2012)
• Initial design criteria and performance specifications • Subsystems Modeling: aerodynamic and structural analysis of compressor • Initial integrated systems analysis • Initial design and cost analysis • Final design specifications • Materials and/or coatings investigated for use in high-pressure hydrogen environment • Revised Phase II Program Plan	• Detailed subsystems modeling • Detailed integrated systems analysis • Critical components design, testing, and development • Detailed integrated design of full-scale and laboratory validation systems • Detailed cost analysis of full-scale system	• Component Procurement • Two-stage centrifugal compressor system assembly • Performance evaluation test plan • Lab testing and system maturation • Final design of full-scale system completed • Field demonstration program plan prepared

Project Engineering Approach
Aerodynamic and Structural Focus

Technical Approach

- Focus on state-of-the-art aerodynamic/structural analyses to develop a high-performance centrifugal compressor system
- Incorporate advanced proven bearings and seal technology to reduce developmental risk and increase system reliability
- Utilize acceptable practice for high-speed gear materials, tip speeds, and loadings
- Collaborate with leading supplier of compressor systems to the Industrial Gas Sector and host site for the prototype test: Praxair Corp.

Solution

- Success of compressor design is an aerodynamic/structural optimization design investigation
  - ~ Maximize centrifugal compressor tip speed to achieve desired pressure ratio within stress limitations of material.
  - ~ Maximum thermodynamic efficiency at high operating tip speeds.
  - ~ Utilize advanced diffuser systems to maximize recovery of dynamic head into static pressure.
- Aerodynamic solution is integrated into design of balance of system components
  - ~ Bearing and seals made part of gearbox design
  - ~ Impellers outboard of any lubricated components
  - ~ Aluminum selected as compatible with hydrogen per documented research and current testing

Project Engineering Approach
Operational Design Envelope

Design Options for Alternative Operating Conditions

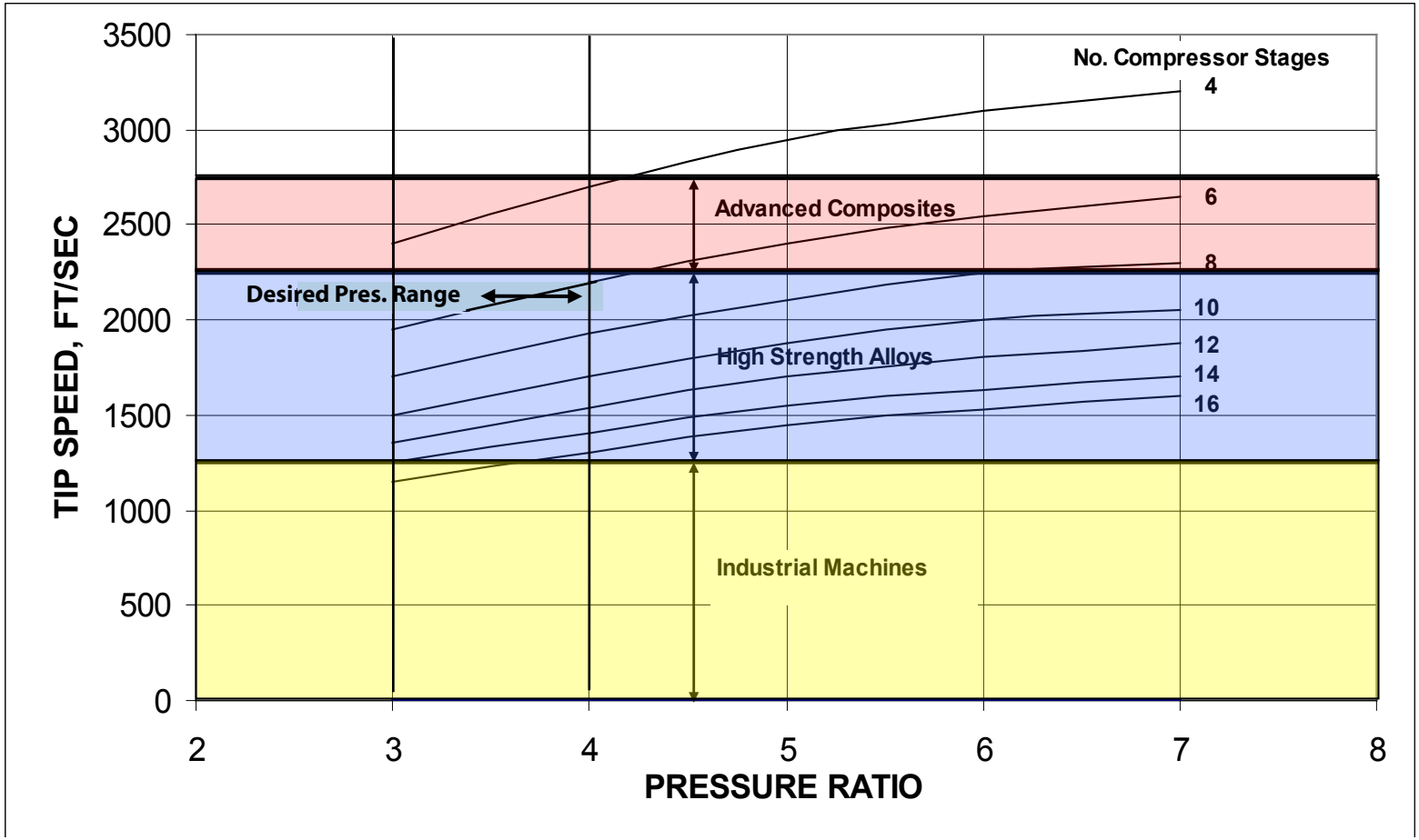

CONCEPTS NREC

Phase I Summary: DOE Target/Goals and Project Accomplishments

Progress Towards Meeting Technical Targets for Delivery of Hydrogen via Centrifugal Pipeline Compression				
{Note: Letters correspond to DOE's 2007 Technical Plan-Delivery Sec. 3.2-page 16}				
Characteristic	**Units**	**DOE Target**	**Project Accomplishment**	**STATUS**
Hydrogen Efficiency (f)	[btu/btu]	98%	98%	**Objective Met**
Hyd. Capacity (g)	Kg/day	100,000 to 1,000,000	240,000	**Objective Met**
Hyd. Leakage (d)	%	< .5	0.2 (per FlowServe Shaft Seal Spec.)	**Objective Met**
Hyd. Purity (h)	%	99.99	99.99 (per FlowServe Shaft Seal Spec)	**Objective Met**
Discharge Pressure (g)	psig	>1000	1285	**Objective Met**
Comp. Package Cost (g)	$M	6.4	4.8	**Objective Met**
Main. Cost (Table 3.2.2)	$/kWhr	0.007	0.005 (per CN Analysis Model)	**Objective Met**
Package Size (g)	sq. ft.	350 (per HyGen Study)	260 (per CN Design)	**Objective Met**
Reliability (e)	# Sys.s Req.d	Eliminate redundent system	Modular sys.s with 240K kg/day with no redundency req.d	**Objective Met**

In Summary: The Original DOE Proposal Requirements were satisfied with the Feasibility Design and Effort was authorized to proceed to complete the Detail Design of the pipeline compressor

Hydrogen Compressor Phase II Detail Design Results: 240,000 kg/day (6.1 Lbm/s); 350 to 1285 psig; 6300 kWe

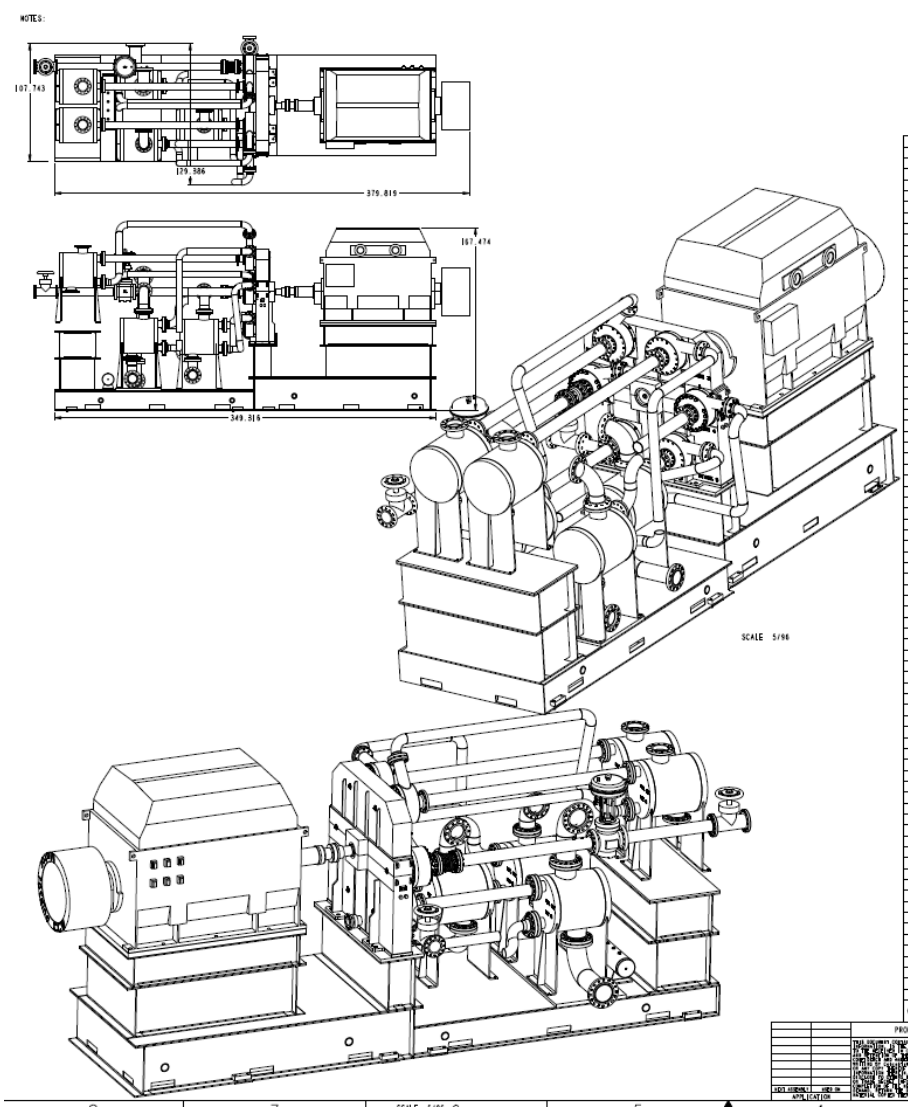

PRELIMINARY
NOT FOR FABRICATION

1	DCT70	SPW-75-L-68-222-1-1-	SUPERMAX ASSY ILP X ILS PASS	316L SS	79
4	DCT70	SPW-75-L-66-256-1-1-	SUPERMAX ASSY ILP X ILS PASS	316L SS	78
5	DCT70	PIPE-REDUCER-6-TO-5	REDUCER 6 X 5 X 6 LG		77
1	S8749	MOTOR-ASM/10L	ANS SYNC GENERATOR W/ TEWACI		76
6	DCT70	HALF-INCH-PIPE			75
6	DCT70	FLOWSERVE-SEAL-AD-91	FLOWSERVE SEAL, ASSEMBLY	TBD	74
1	DCT70	D1-255-8-LOVEJOY-D15	COUPLING, SINGLE FLEXING W/ SHRINK DISK- 6 BOLT		73
36	2V507	98370A038	FLAT WASHER, 1.1/52 ID x 2 OD 18-8 ss	316 SS	72
32	2V507	98370A019	WASHER, 3/8"	18/8 STAINLESS, 3/8"	71
40	2V507	95462A342	NUT, 7/8"-9, GRADE 5 ZINC PLATED	STEEL, ANSI B18.2.2	70
24	2V507	92240A830	BOLT,HEX HD, 18-8 STAINLESS 3/4-10 X1.5"	CARBON STEEL	69
32	2V507	92196A636	CAP SCREW, 18-8 ss SOCKET HEAD 3/8-16 x 5.0LG	ALLOY STEEL 1/2-13 x 5.75 LG	68
22	2V507	92196A604	SCREW, 5/16-18 X 5.0 LG. SOCKET HEAD CAP 18-8 SS	ALLOY STEEL	67
16	2V507	92196A340	CAP SCREW, SOCKET HEAD	18-8 SST, 1/4-20 X .75LG	66
24	2V507	92196A339	CAP SCREW, 1/4-20 x .625 LG. SOCKET HEAD	18-8 SST, 1/4-20 X .75LG	65
36	2V507	92148A038	WASHER, 1" SPLIT LOCK,	18-8 SST, .7710X.1300X.15T	64
36	2V507	91257A995	HEX HD CAP SCREW, 1"-8 X 10.50 LG GRADE 8 STEEL	STEEL, ANSI B18.2.2	63
16	2V507	91251A541	CAP SCREW, 1/4-20 x 7/8" lg SOCKET HEAD	ALLOY STEEL, 1/4-20 X .88 LG.	62
40	2V507	91247A892	HEX HD CAP SCREW, 7/8"-9 X 5.0 LG GRADE 5, ZINC PLATED	STEEL, ANSI B18.2.2	61
6					60
6	DCT70	8IN-SLIPON-FLG-400LB	8" NB SLIP ON FLANGE 300# RF - ASME B16.5	STEEL	59
7	DCT70	8IN-SLIPON-FLG-300-R	8" NB SLIP ON FLANGE 300# RF - ASME B16.5	STEEL	58
1	DCT70	8IN-PIPE-SCH-40-STL-	8" SCH-STD PIPE-ASME B36.10M	STEEL	57
3	DCT70	8IN-PIPE-SCH-40-STL-	8" SCH-STD PIPE-ASME B36.10M	STEEL	56
4	DCT70	8IN-90-DEG-LR-ELBOW-	8" 90-DEG LR ELBOW SCH-STD		55
6	DCT70	8-TH-SS-SLEVE			54
6	DCT70	8-HTX-SS-NUT			53
2	DCT70	6IN	FLANGE 6" NB SLIP ON 300# RF		52
2	DCT70	6IN-SLIPON-FLG-600LB	6" NB SLIP ON FLANGE 600# RF - ASME B16.5	STEEL	51
9	DCT70	6IN-SLIPON-FLG-300-R	6" NB SLIP ON FLANGE 300# RF - ASME B16.5	STEEL	50
1	DCT70	6IN-PIPE-SCH-40-STL-	6" SCH-STD PIPE-ASME B36.10M	STEEL	49
1	DCT70	6IN-PIPE-SCH-40-STL-	6" SCH-STD PIPE-ASME B36.10M	STEEL	48
1	DCT70	6IN-PIPE-SCH-40-STL-	6" SCH-STD PIPE-ASME B36.10M 3.5	STEEL	47
1	DCT70	6IN-PIPE-SCH-40-STL-	6" SCH-STD PIPE-ASME B36.10M	STEEL	46
1	DCT70	6IN-PIPE-SCH-40-STL-	6" SCH-STD PIPE-ASME B36.10M	STEEL	45
7	DCT70	6IN-PIPE-SCH-40-STL-	6" SCH-STD PIPE-ASME B36.10M	STEEL	44
1	DCT70	6IN-PIPE-SCH-40-STL-	6" SCH-STD PIPE-ASME B36.10M	STEEL	43
1	DCT70	6IN-PIPE-SCH-40-STL-	6" SCH-STD PIPE-ASME B36.10M	STEEL	42
2	DCT70	6IN-90-DEG-LR-ELBOW-	6" 90-DEG LR ELBOW SCH-STD		41
6	DCT70	5IN-SLIPON-FLG-400LB	5" NB SLIP ON FLANGE 400# RF - ASME B16.5	STEEL	40
5	DCT70	5IN-PIPE-SCH-40-STL-	5" SCH-STD PIPE-ASME B36.10M	STEEL	39
1	DCT70	5IN-PIPE-SCH-40-STL-	5" SCH-STD PIPE-ASME B36.10M	STEEL	38
1	DCT70	5IN-PIPE-SCH-40-STL-	5" SCH-STD PIPE-ASME B36.10M	STEEL	37
1	DCT70	5IN-PIPE-SCH-40-STL-	5" SCH-STD PIPE-ASME B36.10M	STEEL	36
1	DCT70	5IN-PIPE-SCH-40-STL-	5" SCH-STD PIPE-ASME B36.10M	STEEL	35
1	DCT70	5IN-PIPE-SCH-40-STL-	5" SCH-STD PIPE-ASME B36.10M	STEEL	34
1	DCT70	5IN-PIPE-SCH-40-STL-	5" SCH-STD PIPE-ASME B36.10M	STEEL	33
1	DCT70	5IN-PIPE-SCH-40-STL-	5" SCH-STD PIPE-ASME B36.10M	STEEL	32
1	DCT70	5IN-PIPE-SCH-40-STL-	5" SCH-STD PIPE-ASME B36.10M	STEEL	31
1	DCT70	5IN-PIPE-SCH-40-STL-	5" SCH-STD PIPE-ASME B36.10M	STEEL	30
2	DCT70	5IN-PIPE-SCH-40-STL-	5" SCH-STD PIPE-ASME B36.10M	STEEL	29
19	DCT70	5IN-90-DEG-LR-ELBOW-	5" 90-DEG LR ELBOW SCH-STD		28
1		8251-SS-ANSI---			27
1	DCT70	10X48-H2-MANIFOLD	10"X 48 LG H2 MANIFOLD TANK FOR FRAME	STEEL	26
4	DCT70	10IN-SLIPON-FLG-300-	10" NB SLIP ON FLANGE 300# RF - ASME B16.5	STEEL	25
1	DCT70	10IN-PIPE-SCH-40-STL	10" SCH-STD PIPE-ASME B36.10M	STEEL	24
1	DCT70	10IN-PIPE-SCH-40-STL	10" SCH-STD PIPE-ASME B36.10M	STEEL	23
1	DCT70	10IN-PIPE-SCH-40-STL	10" SCH-STD PIPE-ASME B36.10M	STEEL	22
2	DCT70	10IN-90-DEG-LR-ELBOW	10" 90-DEG LR ELBOW SCH-STD		21
1	DCT70	10193-EX-JOINT-6IN-3	EXPANSION JOINT W/ 6IN CLASS 300 FLANGE	FLEXICRAFT WD1000 EXPANSION JOINT	20
1	DCT70	10195-201	SMALL FRAME STAGE I - 6, GEARBOX & INTERCOOLERS	STEEL	19
1	DCT70	10195-047-6-STAGE	ASSY,GEARBOX,2-STAGE TURBINE LAB PROTOTYPE		18
1	DCT70	10195-046	STAGE 2 WHEEL BACKPLATE		17
6	DCT70	10195-045	SBIM LAMINATED .002 X .062"	STAINLESS	16
5	DCT70	10195-044	STAGE 1 WHEEL BACKPLATE		15
31	DCT70	10195-043	STAGE 1 AND 2 BACKPLATE		14
1	DCT70	10195-042	STAGE 2 INLET 8" PIPE 300 LB FLANGE		13
1	DCT70	10195-041	STAGE 2 SHROUD		12
1	DCT70	10195-038	STAGE 2 FLOWPATH OUTER VOLUTE EXIT		11
1	DCT70	10195-037	STAGE 2 LSA		10
1	DCT70	10195-036	STAGE 2 FLOWPATH VOLUTE		9
6	DCT70	10195-034	SBIM LAMINATED .002 X .062"	1100 ALUMINUM	8
5	DCT70	10195-033	STAGE 1 INLET, 6" PIPE 300 LB FLANGE		7
5	DCT70	10195-032	STAGE 1 SHROUD		6
5	DCT70	10195-031	STAGE 1 FLOWPATH OUTER VOLUTE EXIT		5
5	DCT70	10195-029	STAGE 1 LSA		4
5	DCT70	10195-028	STAGE 1 FLOWPATH VOLUTE		3
1	DCT70	10195-024	IMPELLER, DESIGN, STAGE 2-CW	7075-T6 ALUMINUM	2
5	DCT70	10195-020	IMPELLER, DESIGN, STAGE 1	7075-T6 ALUMINUM	1
CGT	CAGE CODE	PART NO.	DESCRIPTION	MATERIAL/SPECIFICATION	ITEM NO.

PARTS LIST

PROPRIETARY NOTICE

COPYRIGHT © 2003 Concepts NREC. All Rights Reserved.

THIRD ANGLE PROJECTION

TITLE: HYDROGEN COMPRESSOR ASSY DEPT OF ENERGY

SIZE: E | CODE IDENT NO.: DCT70 | DWG NO.: 10195-200-STG-6 | REV:

SCALE: 1/1 | WT: | SHEET 1 OF 1

CONCEPTS NREC

Phase II – Detailed Engineering Design for Six-stage Full-scale System and a Two-stage Laboratory Prototype

PHASE II OBJECTIVES:

- **COMPLETED - Critical component developed and/or specified for near-term availability (rotor, shaft seal, bearings, gearing, safety systems)**
- **COMPLETED - Detailed design and cost analysis of a complete pipeline compressor system**
- **COMPLETED - A two-stage Laboratory Prototype Compressor System to verify mechanical integrity of major components at full power per stage**
- **COMPLETED - Go/No-Go decision regarding proceeding into Phase III: Fabrication of Complete Two-stage Hydrogen Compressor for Laboratory Testing**

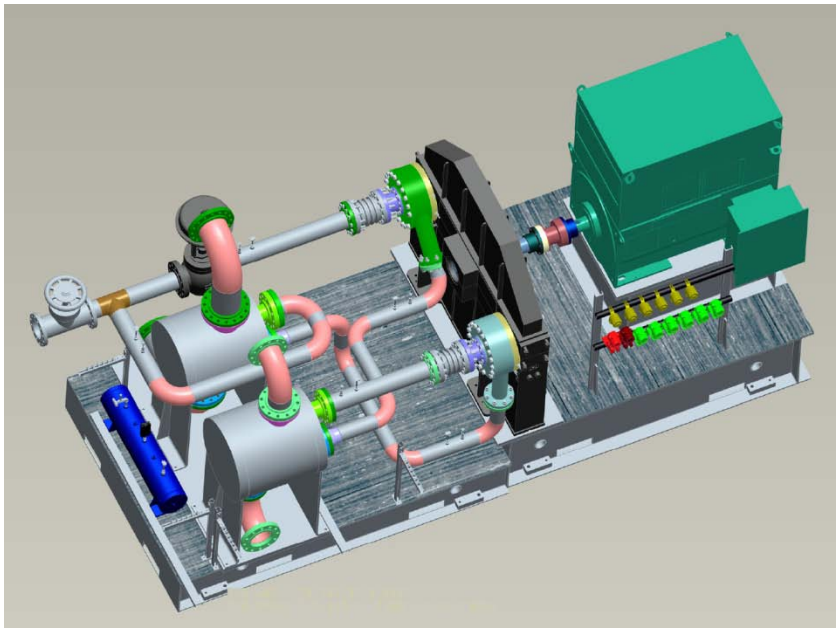

Compressor Module Design Specifications and Major Components

- **Compressor design specifications for near term Gas Industry and DOE Infrastructure Applications**
  - $P_{comp.}$ = 350 psig to 1285 psig; flow rate = 240,000 kg/day
  - Six-stage, 60,000 rpm, 3.56 pressure ratio compressor
  - 7075-T6 Aluminum Alloy
  - Nitornic-50 Pressure Encasement
  - Integral gearbox pinions driving 6, overhung impellers

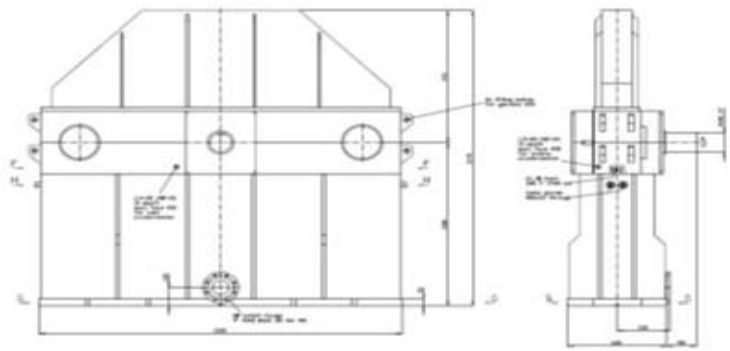

- **Design of compressor's major mechanical elements completed and manufacturers selected**
  - Artec Machine Systems gearbox with one-speed step gear operating at acceptable gear tip speeds and loads
  - KMC tilting-pad radial bearing designs confirmed for use
  - Flowserve gas face-seals confirmed to meet necessary specifications for hydrogen applications

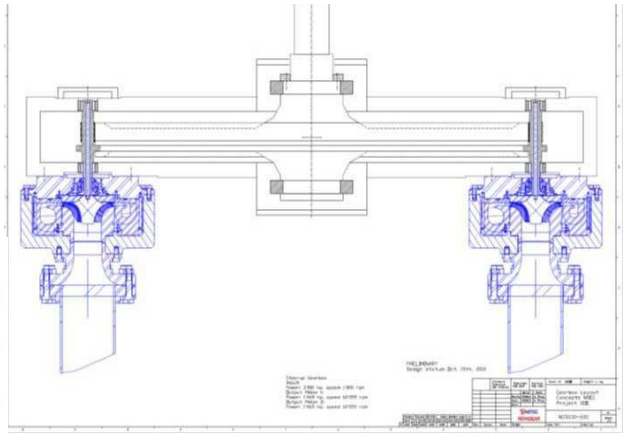

Full-Scale Artec Machine Systems Gearbox for 2-stage System with Bull Gear designed to accommodate 6 Stages

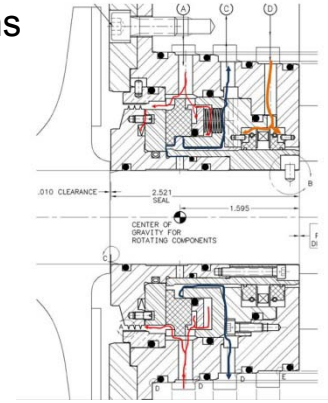

- **Tranter Plate-type Heat Exchanger design meets specifications to cool hydrogen gas to 100°F between stages using 90°F water**

In Summary: All Major Compressor Sub-Systems are available "Near-Term"

Detailed Engineering Design for All Six Compressor Rotors Completed and First Stage Machined for Validation Spin Test

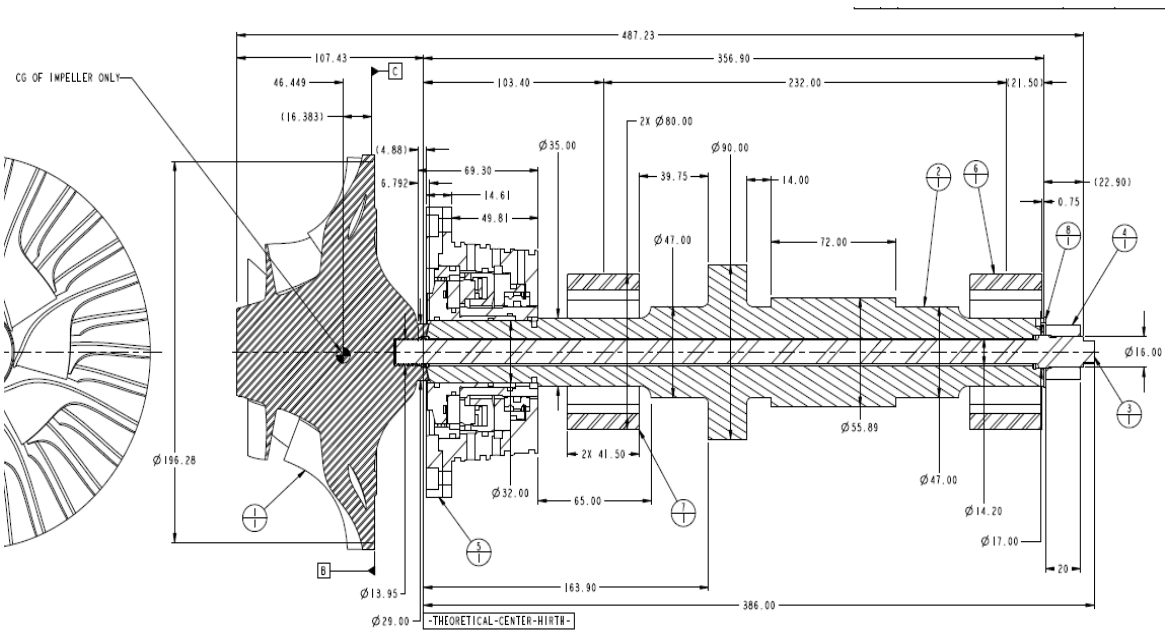

Overhung Rotor-Drive Shaft Integrated with Shaft Seal, Bearing, and Pinion

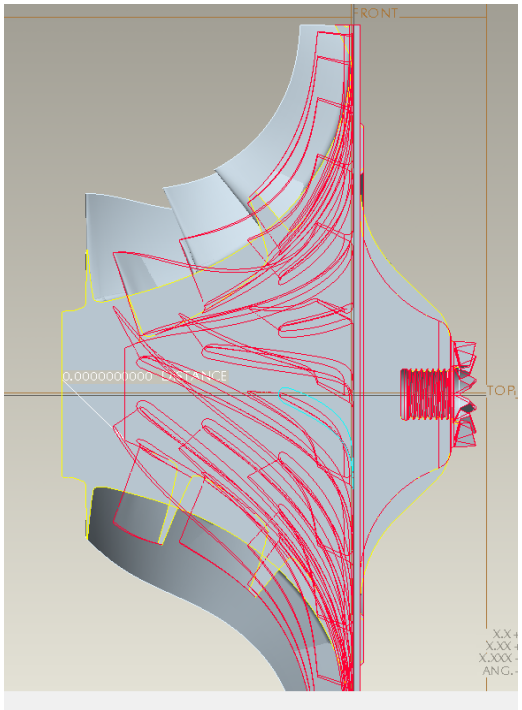

Overlay of First and Sixth Stages for Size Comparison

CONCEPTS NREC

FEA by Concepts NREC Confirms Acceptable Rotor Stress Levels at 2100 ft/sec and Rotor Stability at 60,000 rpm

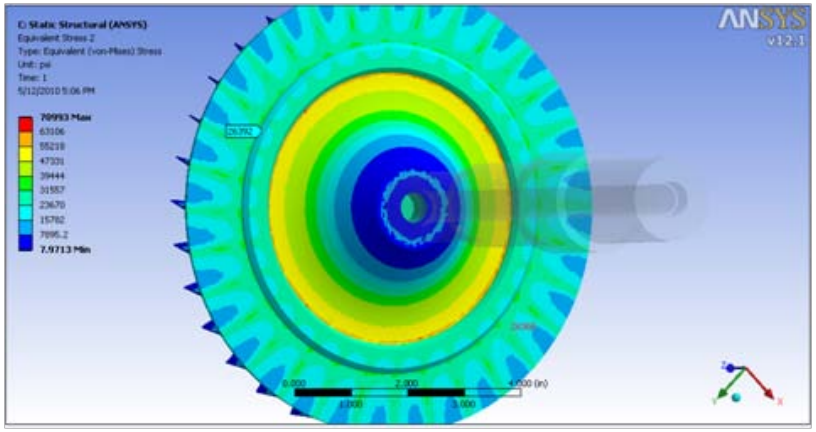

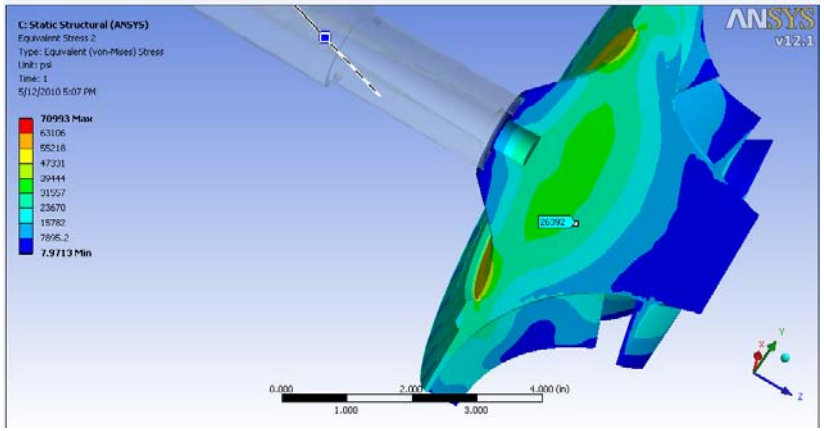

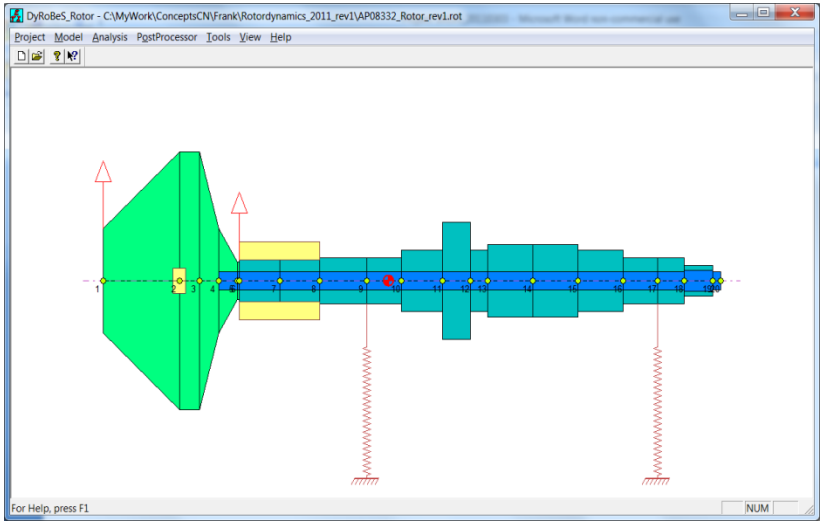

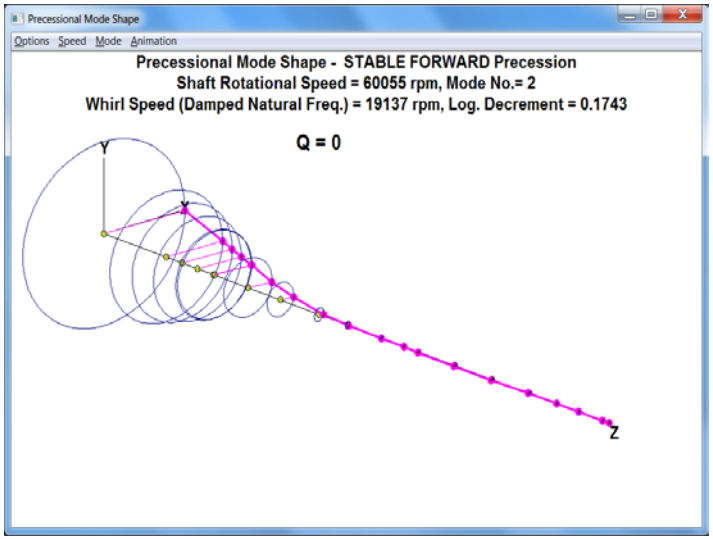

CONCEPTS NREC

One of Six Compressor Stages Shown with Rotor, Drive Shaft, Volute, and Encasement System for High-pressure Operation

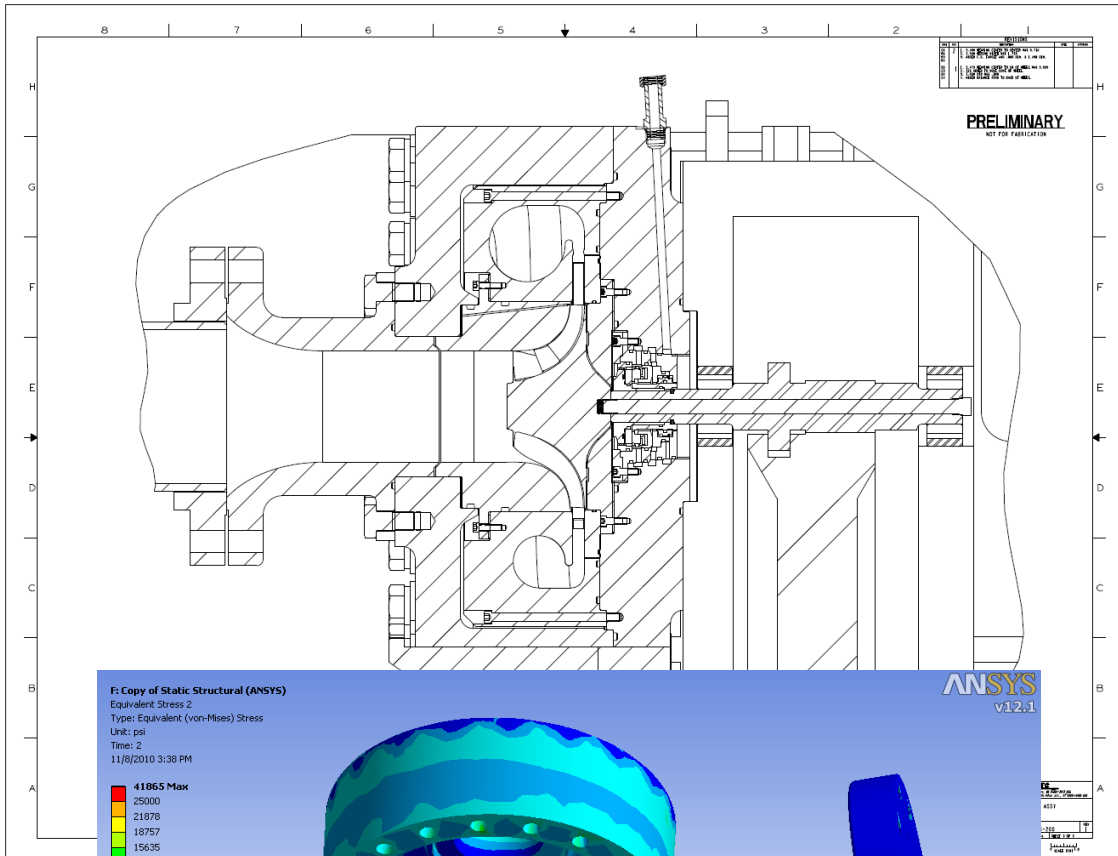

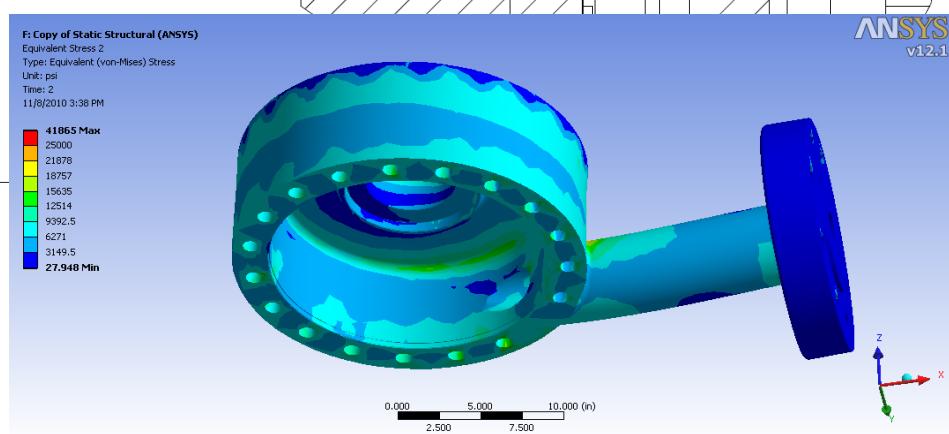

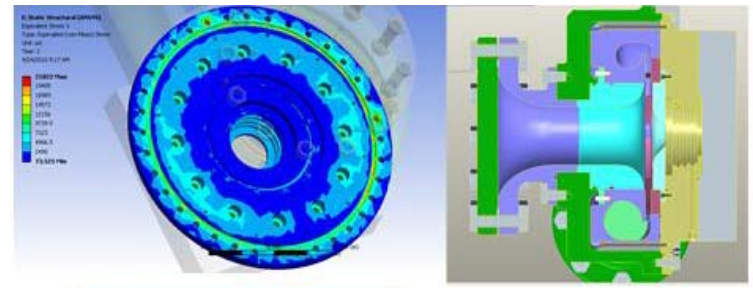

- The highest stress in the backface located in the center
  - 21.8 KSI MPa (87% of yield)

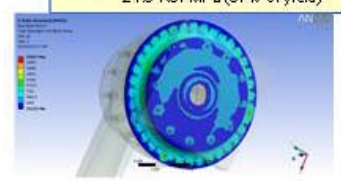

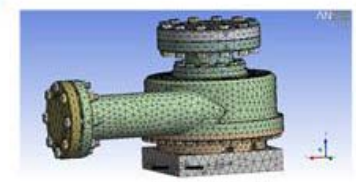

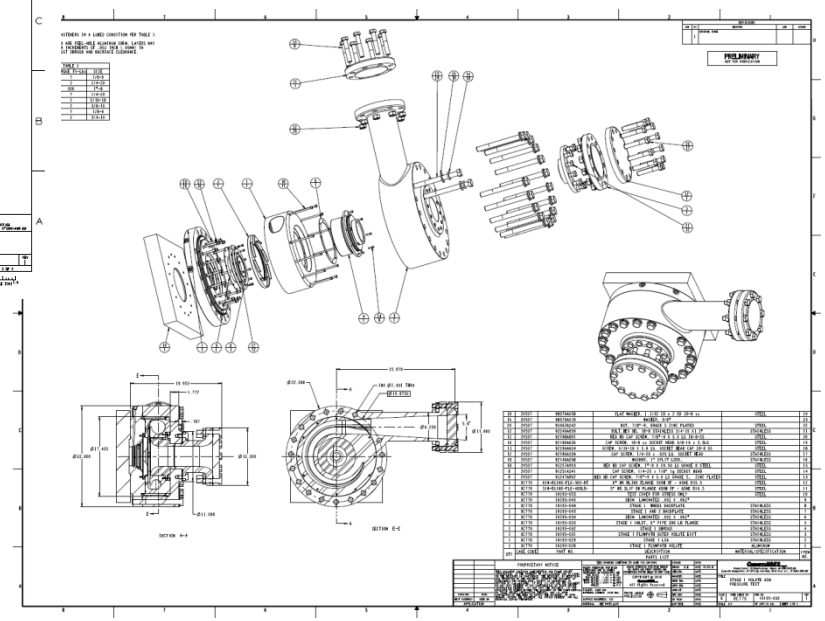

Major Focus of Phase II was Design of a Two-stage Laboratory Prototype for Testing in Phase III

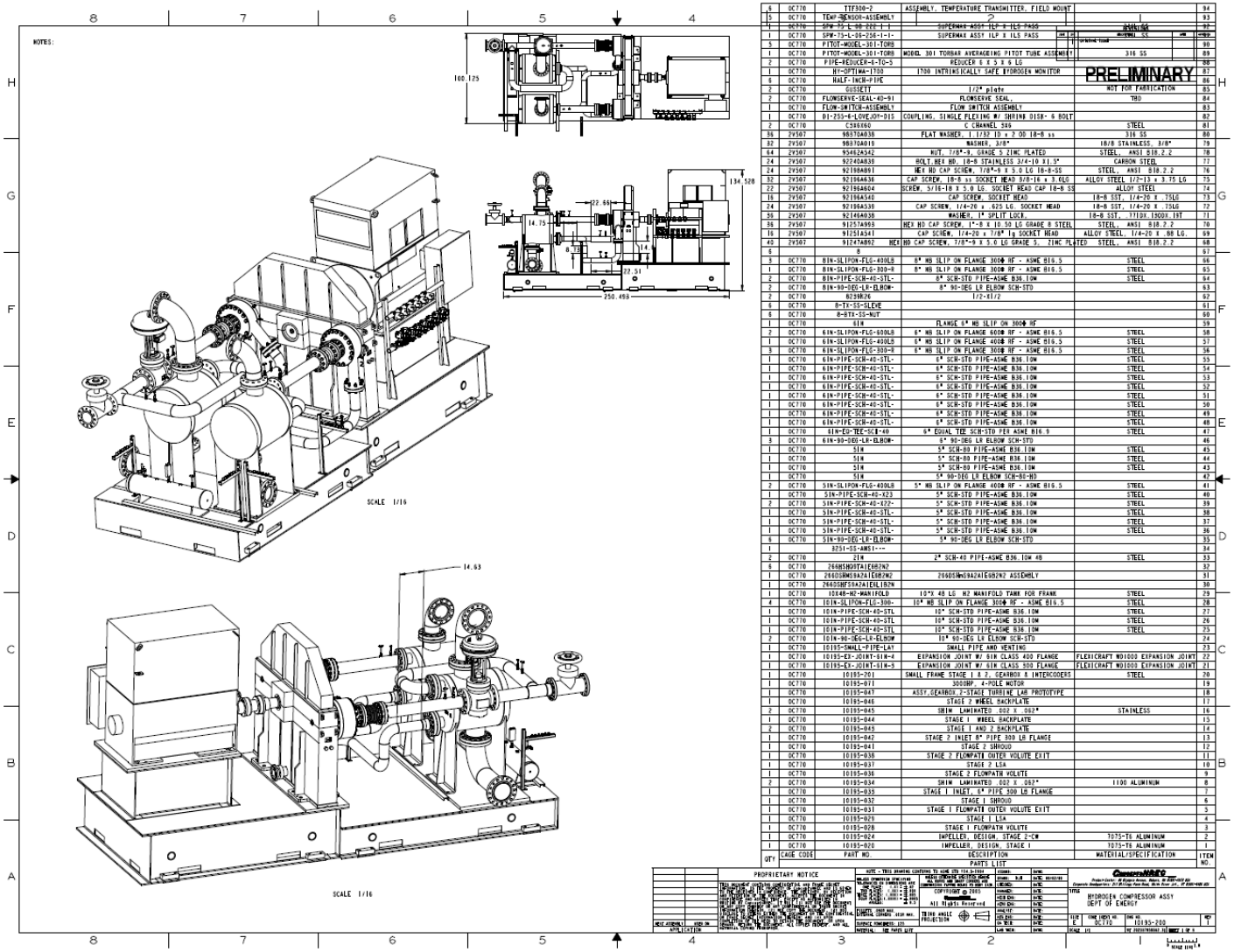

CONCEPTS NREC

Major Compressor System Components Engineered and Specified from Industrial Suppliers

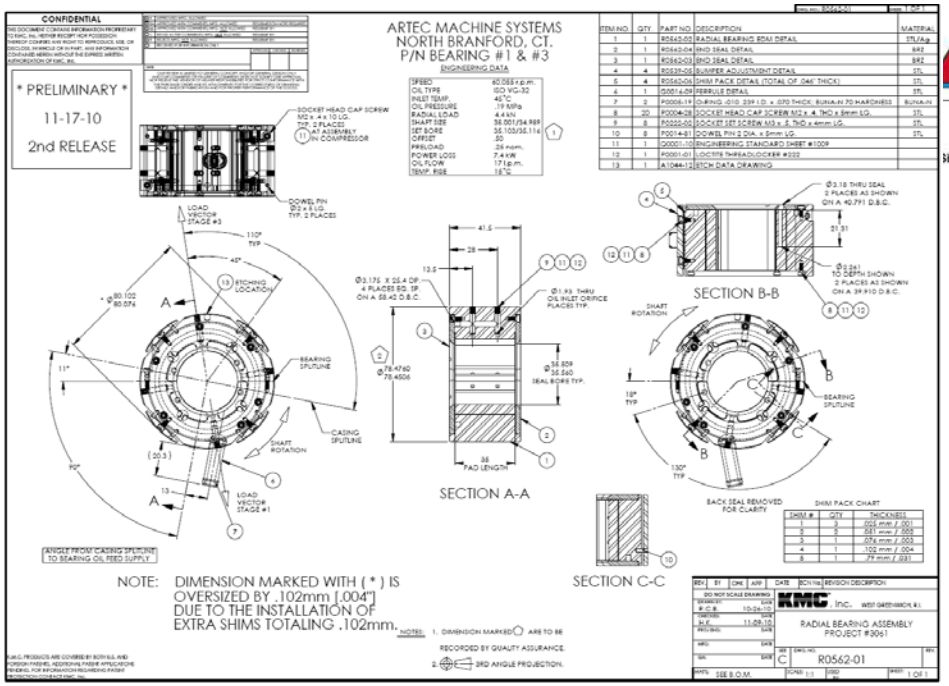

KMC Tilting Pad Hydrodynamic Bearings

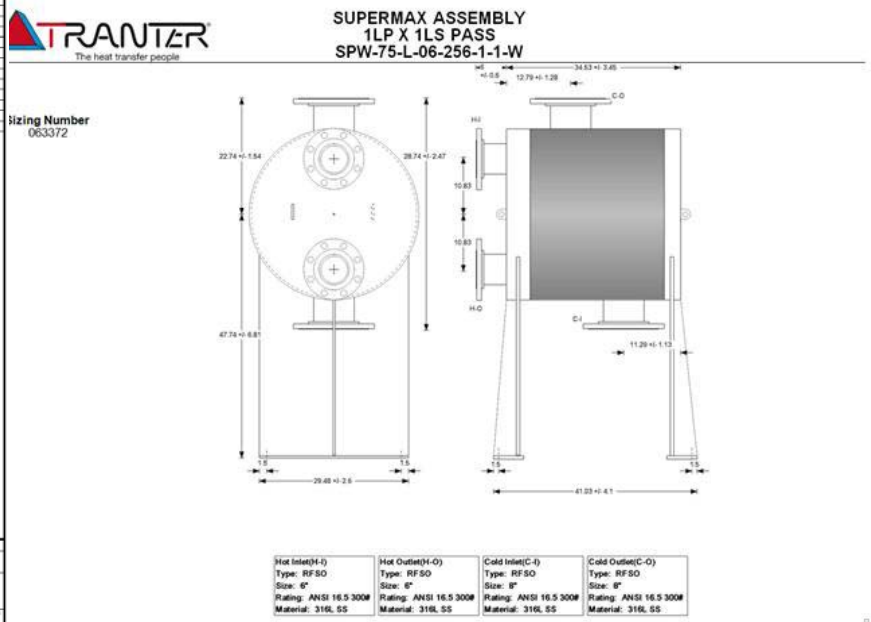

Tranter Supermax PlateCoil Assy. for the Intercooler

CONCEPTS NREC

Major Compressor System Component High Speed Gas Shaft Seal

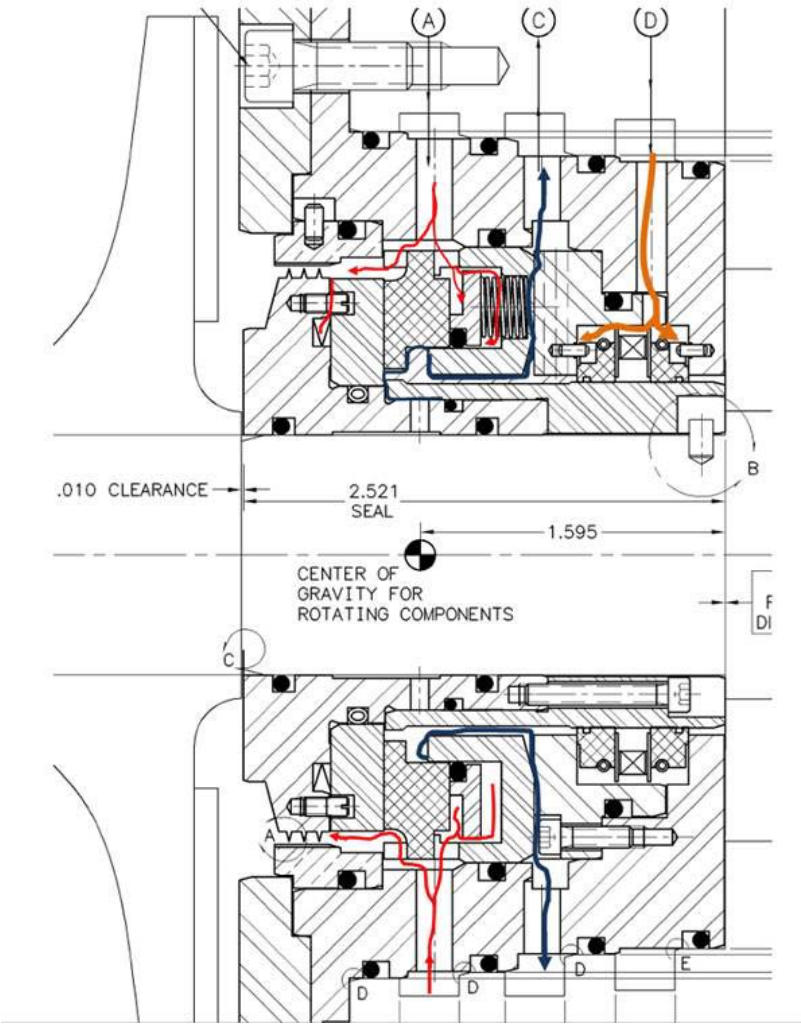

Flowserve Gas Shaft Seal is proven technology for use with hydrogen and provides acceptable performance and minimal leakage

60,000 rpm
< 0.1% leakage

Technical Accomplishments and Progress

Texas A&M University Materials Selection + Summary of Testing in Progress

- **Collaboration with Texas A&M (Dr. Hong Liang) and Technical Discussions/Collegial-Shared Experiences with researchers at several National Labs and Institutions:**
  - Sandia National Labs (fracture mechanics testing; Dr. Chris San Marchi)
  - Savannah River National Labs (specimen "charging" with hydrogen plus tensile testing with H2; Dr. Andrew Duncan)
  - Argonne National Labs (Dr. George Fenske)
  - Univ. of Illinois (Dr. Petros Sofronis; re: Strain corrosion affects of hydrogen)

  Directed Focus of the turbomachinery design to:
  - Aluminum 7075-T6 as Material design choice for its light weight, strength (i.e., it's comparable to titanium at <100˚C and thus very suitable for centrifugal compressor applications), and compatibility with hydrogen
- **Using charged specimens and Small Punch Texas A&M has confirmed that charged specimens of 7075-T6 is unaffected by exposure to hydrogen.**

  - **Future Work by TAMU: Determine affects of several coatings on Ti Grade 2, namely:**
    - Metallic hydride, tungsten and tungsten carbide, TiO_2, CrO_3
    - Accuratus (APS Company); Alodine EC^2 ElectroCeramic (Henkel Corp)
    - SermaLon (Sermatech International)

Phase II Accomplishments within Schedule and Available Budget

- Completed design of two-stage, full-load laboratory prototype
- Completed development of computer performance & cost model
- Completed FMEA analysis and analytical methodology to compare reliability and O&M costs of centrifugal and reciprocating compressors
- Completed algorithm for anti-surge valve sizing for emergency shutdown and system venting strategy at start-up and shutdown
- Comparative assessment of effects of hydrogen on aluminum and titanium specimens by Texas A&M University

Future Phase III Project Work

- **Phase III System Validation Testing (Jan. 2011 to Sept. 2012)**
  - Continue materials testing at Texas A&M University with hydrogen to determine affects of coatings that can be used with titanium
  - Component procurement for the two-stage functional hydrogen compressor system
  - Assembly of the two-stage centrifugal compressor system
  - Coordinating integration of compressor prototype in a Praxair hydrogen test facility
  - Conduct aerodynamic testing and assessment of mechanical integrity of the compressor system

Phase III – Hydrogen Compressor Laboratory Testing Planning (cont'd)

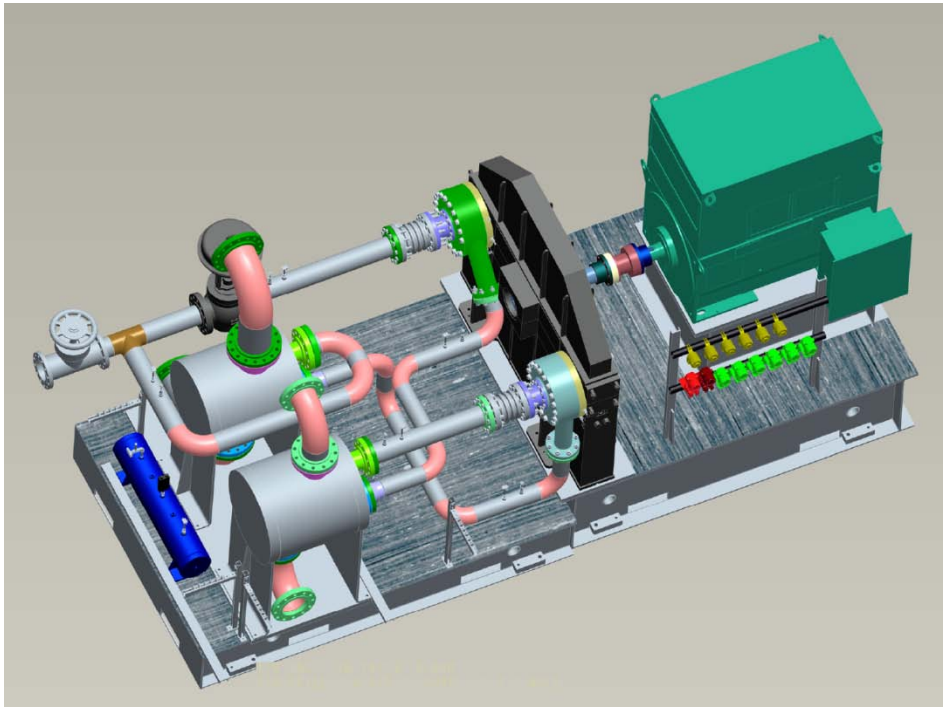

1. Complete detailed design and fabricate two-stage, fully functional compressor prototype (2200 kWe) at 100% load (6.1 Lbm/s = 240,000 kg/day)
2. Induction motor, controls, hydrogen safety systems and data acquisition with VFD possible
3. Testing with custom ARTEC gearbox
4. Testing with hydrogen at Praxair facility
5. Testing in FY 2012

Project Collaborations:

Strengths & Responsibilities of Partners

Praxair

- Praxair will test the two-stage Lab Prototype that is to be developed in Phase III
- Near-term industrial user at the conclusion of the development program
- Provides Industrial Gas user technical experience and gas industry specification data

Texas A&M University

- Provides material science expertise and coordination of materials testing with Sandia and Savannah River National labs

HyGen Industries

- Provides experience in hydrogen fueling infrastructure: pipeline and refueling station systems, has a database of customer-user engineering specifications. Assists in developing implementation plan for pipeline applications for hydrogen compressors

Project Summary

- **Relevance:** **An advanced pipeline compressor system has been designed that meets DOE's performance goals for:**
  - High reliability with 350 to 1200^{+} psig compression of 240,000 kg/day at 98% hydrogen efficiency
  - footprint 1/4 to 1/3 the size of existing industrial systems at projected cost of less than 80% of DOE's target

- **Approach:** **Utilize state-of-the-art and acceptable engineering practices to reduce developmental risk and provide a near-term solution for the design of a viable hydrogen pipeline compressor:**
  - aerodynamic/structural analyses for acceptable material (7075-T6 & Nitronic®-50) stresses in hydrogen
  - Industrially proven bearings, seal technology, gearing, heat exchangers, and lube system

- **Tech. Accomplishments & Progress:** **Aerodynamic analysis and design of a cost-effective, six-stage centrifugal compressor and a two-stage full-power lab prototype have been completed. The two-stage laboratory prototype will be tested at Praxair's facility.**

- **Technology Transfer/Collaboration:** **The collaborative team consists of Praxair, an industrial technical experienced user and host of lab prototype test; a materials researcher, Texas A&M; a hydrogen refueling industry consultant, HyGen; and the coordinated technical support of several National Labs.**

- **Proposed Future Research:** **Complete materials coating testing of specimens with TAMU; actual rotor forensics after high-speed testing; start the procurement of major components for the laboratory testing of a two-stage prototype compressor-gearbox in Phase III; prepare Test Plan for lab test.**

Additional Supportive Data

- **The following slides are included here to provide additional support during the question and answer period for the salient summary that has been offered during the formal presentation describing the extensive work that has been performed during the last 10 months.**

Phase II – Detailed Engineering Design

OBJECTIVE:

The overall objective of Phase II is to undertake critical components testing and development, and based on the results, prepare a detailed design and cost analysis of a complete pipeline compressor system. This design will incorporate all the necessary subsystems for stand-alone testing in an actual pipeline system environment. In particular, fabrication and laboratory testing will be performed to verify design parameters for bearings, seals, impellers, and materials in a hydrogen environment. In addition, a laboratory validation test unit will be designed to enable the testing of a partial integrated assembly to take place in Phase III. At the conclusion of this task, a Go/No-Go decision will be made with regard to proceeding into Phase III.

2.1 Detailed Subsystems Modeling

The objective of this task is to prepare detailed analytical models of the centrifugal compressors, gearbox, intercoolers and prime mover to establish the specific design parameters from which to prepare detailed designs. Analytical modeling will be conducted in regard to various aerodynamic design tradeoffs that affect compressor performance, impeller stress, and dynamic stability. This work will also include the design of the high-speed gearbox (bearing loads, seals, lubrication, etc.), prime mover, control system. Current design practices as well as advanced concepts will be factored into the model to identify critical areas of concern, design approaches, and if necessary, future mitigation design strategies.

2.2 Detailed Integrated Systems Analysis

In parallel with Task 3 2.1, Subsystems Modeling, a detailed integrated system analysis will be performed that defines the predicted performance of the system under alternative operating conditions consistent with the design criteria and specifications defined in Task 3.1.5. This work will include process flow and instrumentation diagrams, mass flow and energy balances, and control strategies.

2.4 Critical Components Testing and Development

The objective of this task is to design, fabricate, and test critical components under simulated operating conditions to validate predicted design. Worst-case operating conditions of the impellers, seals, and bearings will be defined, and high-speed, dynamic testing under controlled laboratory conditions will be undertaken. High-speed spin tests will be conducted to validate predicted stresses at various speeds, including operation to failure to define the ultimate stress limit of the impeller. Dynamic stability limits will also be verified.

Phase II – Detailed Engineering Design (continued)

2.5 Integrated System Design

In this task, two designs, the first for a complete multistage system, and a second for a limited overall pressure ratio two-stage compressor system will be prepared in sufficient detail to estimate the cost of each system. The two-stage compressor system will include all the subsystems, but operate at a reduced overall pressure ratio and power input to facilitate laboratory testing and development. This will include the compressors, intercoolers, gearbox, motor, lubrication system, skid, and controls. Quotations will be requested for the two-stage compressor equipment to be built and tested in Phase III.

2.6 Detailed Cost Analysis

A detailed manufacturing, operating, and maintenance costs analysis of the proposed system will be prepared. Using established scaling laws, the capital costs of various size systems up to 1 million kg/day will be estimated.

2.7 Revised Phase III Program Plan (Go/No-Go Decision)

This task is to revise the original Phase II Plan to reflect the current program development status. This task reflects the second Go/No-Go decision point in the program. Given the decision to move ahead, a revised program plan will be prepared reflecting the present level of development and critical technology hurdles that must be overcome to achieve the design goals. This plan will include a revised task, schedule, and cost plan with recommendations regarding accelerating, eliminating, or redirecting certain activities. This plan will be submitted to the DoE Program for review and approval before proceeding into the next phase of the program.

2.8 Program Management and Reporting

The Program Manager will set goals, plan their accomplishment, maintain effective personnel on the project, negotiate and administer agreements between all participants, including subcontractors, and deliver all contract commitments. Periodic status and other report obligations will be submitted to document and summarize the program. A DoE Phase II Final Report including Topical reports for Tasks 3.2.5, 3.2.6 and 3.2.7 will be prepared.

.

Hydrogen Piston Cost ($) and Operation & Maintenance ($/kWhr) Using DOE's HDSAM v.2 Economics

No. of Piston Stages	4	3%	% Maintenance
kWe rating	6,226	2	Multiple of Capital Equip. Cost
Kg/day Hydrogen Flowrate	240,000		

$ compressor=	$	6,278,724
$, installation=	$	12,557,447
$, maintenance/yr=	$	376,723
kW-hr=		53,978,993
O&M Cost [$/KwHr]=		0.0070

FMEA Document Has Been Prepared for Compressor Subsystems Shown

Project: DOE Hydrogen Compressor - Detail

System: ARP

FMEA Working Component List	
ID#	**Sub-Assembly / Component**
1	**Motor Subsystem**
1.1	Motor Shaft
1.2	Motor Bearings
1.3	Motor Windings
1.4	Motor Cooling
2	**Gearbox Subsystem**
2.1	**Low Speed (Input) Stage**
2.1.1	Input Coupling
2.1.2	Input Shaft
2.1.3	Input Shaft Bearings
2.1.4	Input Shaft Seal
2.1.5	Input Gear
2.2	**Intermediate Speed Stage**
2.2.1	Int. Gear (in)
2.2.2	Int. Shaft
2.2.3	Int. Bearings
2.2.4	Int. Gear (out)
2.3	**High Speed (Output) Stage (2X)**
2.3.1	High Speed Gears
2.3.2	High Speed Shaft
2.3.4	High Speed Bearings
2.3.5	Thrust Bearing
2.3.6	High Speed Shaft Seals
2.4	**Lubrication Subsystem**
2.4.1	Lubricant
2.4.2	Pump
2.4.3	Filter
2.4.4	Lubrication Jets

3	**Compressor Stages Subsystems**
3.1	**Stage #1**
3.1.1	Stage #1 Shaft
3.1.2	Stage #1 Impeller
3.1.3	Stage #1 Impeller Attachment
3.1.4	Stage #1 Shaft Seal
3.1.5	Stage #1 Housing
3.2	**Stage #2**
3.3	**Stage #3**
3.4	**Stage #4**
3.5	**Stage #5**
3.6	**Stage #6**
4	**Piping and Intercooling Subsystem**
4.1	**Piping**
4.1.1	Flanges / Seals
4.1.2	Pipe
4.2	**Intercoolers**
4.2.1	Flange / Seal, Working Fluid
4.2.2	Flange / Seal, Coolant
4.2.3	Internal Piping
4.2.4	Coolant
5	**Hydrogen Containment Subsystem**
5.1	**Containment Housing**
5.2	**HP Re-Introduction System**
5.3	**LP Ventilation System**
6	**System Skid**
7	**Controls and Instrumentation**

Failure Mode Identification and Risk Ranking

Project title: 10195 DOE Hydrogen Compressor - Preliminary Design
Author: ARP
Date:

Risk Matrix:

Risk Level	Description
Low	tolerable, no action required
Medium	mitigation and improvement required to reduce risk to low
High	not acceptable: mitigation and improvement required to reduce risk to low

Probability Classes:

No.	Name	Description	Indicative Annual Failure Rate (up to)
1	Very Low	Negligible event frequency	1.0E-04
2	Low	Event unlikely to occur	1.0E-03
3	Medium	Event rarely expected to occur	1.0E-02
4	High	One or several events expected to occur during the lifetime	1.0E-01
5	Very high	One or several events expected to occur each year	1.0E+00

Consequence Classes:

Class	Description of consequences (impact on)				
	Function	Safety	Environment	Operation	Assets
1	Minimal effect, easily repairable or redundant system	Negligible injury, effect on health	Negligible pollution or no effect on environment	Negligible effect on production (hours)	Negligible
2	Loss of redundant function, reduced capacity	Minor injuries, health effects	Minor pollution / slight effect on environment	Some small loss of production, less than a month	Significant, but repairable
3	Loss of parts of main function, with significant repairs required	Significant injuries and/or health effects	Limited levels of pollution, manageable / moderate effect on environment	Production loss of 1 month. Light intervention required to replace equipment	Localised damage, repairable on site
4	Shutdown of system	A fatality, moderate injuries	Moderate pollution, with some clean-up costs / Serious effect on environment	Significant loss of production of 1 to 3 months	Loss of main function, major repair needed by removal of part of device
5	Complete failure	Several fatalities, serious injuries	Major pollution event, with significant clean-up costs / disastrous effects on the environment	Total loss of production for more than 3 months	Loss of device

Risk Categories

	Consequence				
Prob.	1	2	3	4	5
5	Low	Med	High	High	High
4	Low	Low	Med	High	High
3	Low	Low	Med	Med	High
2	Low	Low	Low	Low	Med
1	Low	Low	Low	Low	Low

Detection Classes:

Detection Rating	Description	Definition
5	Remote / Uncertainty	Remote chance Design Control will detect, or Design Control will not and/or cannot detect a potential cause/mechanism and subsequent failure mode; or there is no Design Control
4	Remote	Remote chance the Design Control will detect a potential cause/mechanism and subsequent failure mode
3	Low	Low to Moderate chance the Design Control will detect a potential cause/mechanism and subsequent failure mode
2	Moderately High	Moderately High to High chance the Design Control will detect a potential cause/mechanism and subsequent failure mode
1	Very High/Almost Certain	Design Controls will almost certainly detect a potential cause/mechanism and subsequent failure mode

FMEA Document Risk Ranking Used with Compressor Subsystems Shown

Example of Methodology for Comparing the Relative Maintenance Cost of a Piston and Centrifugal Hydrogen Compressor

Mult. Corr.=	1.15	
Labor Cost=	100	$/hr
Labor Time, Dt=	80	hrs
kW,rating =	6264	kW

Piston-type Compressor Maintenance Cost Analysis

	fn	Nfail.s/yr.	$/compone	Dt x fn	$/comp.repair
2-Step down Gearbox	8	0.16	15000	640	12979
Crankshaft Roller Bearing	6	0.06	7500	480	3263
Crankshaft	6	0.29	12000	480	17498
Pressure Packing	3.5	0.11	8000	280	3784
		1.75		0	0
Connecting rod sleeve bearing	6	0.17	7500	480	9607
Heat Exchangers	3	0.16	12500	240	5861
		1.75		0	0
Pres. Lube. Crosshead @MTTF=	4	1.33	10000	320	56000
Piston	5.5	0.04	7500	440	1805
Piston Valves	5	0.14	5000	400	6307
Cylinders	5.5	0.004	8000	440	182
Routine Maintenance=	1	1	20000	80	28000
				4280	145286
			$maintenance/kWhr=	0.00595	
			Availability=	0.51	

Centrifugal Compressor Maintenance Cost Analysis

	fn	Nfail.s/yr.	$/compone	Dt x fn	$/comp.repair
Gearbox	10	0.16	25000	800	17251
Gears	8	0.09	7500	640	6263
spare		0.00	15000	0	0
Dynamic Seal	3.5	0.17	8000	280	6235
		0.00		0	0
Sleeve bearing	6	0.52	7500	480	28821
Heat Exchangers	3	0.27	15000	240	10437
		1.75		0	0
Highly Stressed Shaft	3	0.011	10000	240	357
Pinion Gear	4.5	0.26	7500	360	11432
		0.00	7500	0	0
		0.00	8000	0	0
Routine Maintenance=	1	1	20000	80	28000
				3120	108796
			$maintenance/kWhr=	0.00354	

Example of Relative Comparison of Centrifugal vs. Piston Compressor Reliability

Hazard failure Rates (λ x e6): (ref.: Tables 9.2, 9.3, 9.4, 9.5 in B.S. Dhillon's text)

A	**Gearbox**	18.755
B	**Gears**	5
C	**spare**	
D	**Dynamic Seal**	3.295
E	**spare**	
F	**Sleeve bearing**	4.94
G	**Heat Exchangers**	6.11
H	Generic Compressor	200
I	**Highly Stressed Shaft**	0.2
J	**Pinion Gear**	5
K	**spare**	
L	**spare**	
M	**spare**	

Number of Impellers= 6

Time Period (yrs)= 3

Individual Reliabilities (R):

			Increased Risk Multipl Factor
A	**Gearbox**	0.990	1
B	**Gears**	0.997	1
C	**spare**	1.000	1
D	**Dynamic Seal**	0.998	1
E	**spare**	1.000	1
F	**Sleeve bearing**	0.997	1
G	**Heat Exchangers**	**0.997**	1
H	Generic Compressor	0.900	1
I	**Highly Stressed Shaft**	1.000	1
J	**Pinion Gear**	0.997	1
K	**spare**	1.000	1
L	**spare**	1.000	1
M	**spare**	1.000	1

CALC.D SINGLE-STG CENTRIFUGAL COMPRESSOR RELIABILITY=	**0.990**	**6**
Calculated Gear Box Reliability=	**0.985**	**1**
Calculated Heat Exchanger Reliability=	**0.984**	**5**
BASIC COMPRESSOR V	**0.943**	

This:

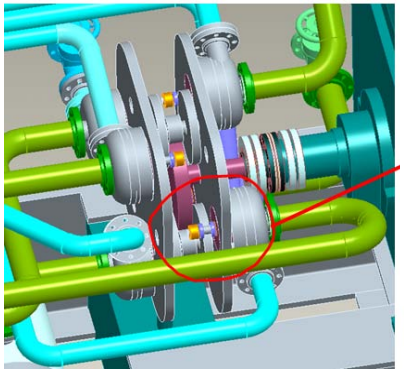

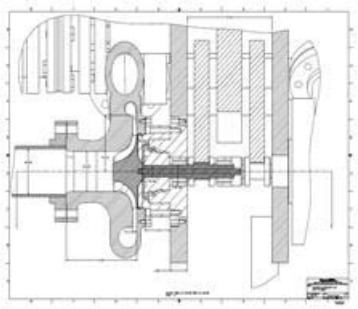

Compared to this:

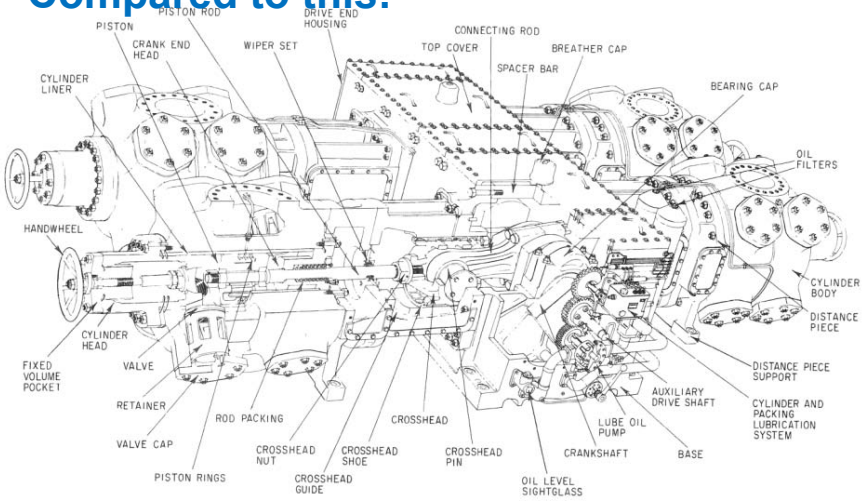

Fig. 6-85 HVC engine—compressor.

CONCEPTS NREC

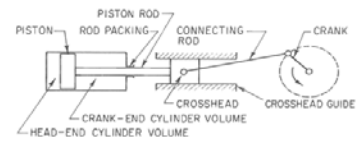

Fig. 6-82 Double-acting design.

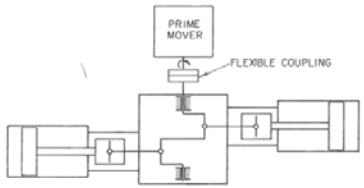

Fig. 6-83 Balanced-opposed compressor

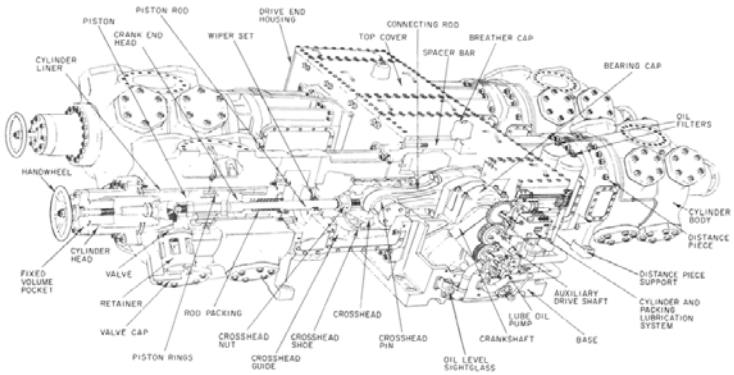

Fig. 6-85 HVC engine—compressor.

Assumed Reliability of Redundent Piston Comp. System 0.99

Piston Compressor with one Standby

1.148551

(Solved) Reliability of Single Unit= 0.862 -4.3E-07

Mult. Corr.=	**1.82**	
Labor Cost=	**100**	$/hr
Labor Time, Dt=	**60**	hrs
kW,rating =	**6264**	kW

Hazard failure Rates (λ x e6): (ref.: Tables 9.2, 9.3, 9.4, 9.5 in B.S. Dhillon's text)

				fn	Nfail.s/yr.	$/compone	Dt x fn	$/comp.re
1	Gearbox	18.755	table 9.4, #1	8	0.16	25000	480	11993
2	Roller Bearing	2.237	table 9.5, #5	6	0.06	7500	360	2557
3	Crankshaft	33.292	table 9.5, #6	5	0.29	15000	300	13124
4	Pressure Packing	3	table 9.2, #18	3.5	0.11	8000	210	3048
5	Compressor @ MTTF,yrs= 0.573	199			1.75		0	0
6	Sleeve bearing	4.94	table 9.5, #4	5	0.17	7500	300	6491
7	Heat Exchangers	6.11	(table 9.2, #19 with lower & upper limit=6.11 to 244)	3	0.16	15000	180	5299
8	Compressor (Table 9.2)	200	(table 9.2, #16 with Lower & upper limit=0.84 to 198)		1.75		0	0
9	Lube. Crosshead @MTTF= 3	38.052		3	1.33	10000	180	37333
10	Piston	1	table 9.2, #26	4.5	0.04	7500	270	1209
11	Piston Valves	2	table 9.2, #32 with lower& upper limit=0.5 to 10	4	0.14	5000	240	4065
12	Cylinders	0.1	table 9.2, #33	4.5	0.004	8000	270	123
13	spare			1	1	30000	60	36000
14	spare							
	Number of Cylinders=	4					2850	121242
	Time Period (yrs)=	3			**$maintenance/kWhr=**		**0.00596**	

			Number of Indiv. components used for ONE piston
	Individual Reliabilities (R):		
1	**2-Step down Gearbox**	**0.611**	1
2	**Crankshaft Roller Bearing**	**0.943**	3
3	**Crankshaft**	**0.417**	1
4	**Pressure Packing**	**0.924**	1
6	**Connecting rod sleeve bearing**	**0.878**	1
7	**Heat Exchangers**	**0.852**	3
8	Compressor (Table 9.2)	0.005	
9	**Pres. Lube. Crosshead @MTTF=**	**0.368**	1
10	**Piston**	**0.974**	1
11	**Piston Valves**	**0.949**	2
12	**Cylinders**	**0.997**	1
13	**spare**	**1.000**	
14	**spare**	**1.000**	
	Gearbox and Crankshaft=	**0.213**	
	Heat Exchangers	**0.618**	
	CALCULATED PISTON COMPRESSOR RELIABILITY=	**0.005**	**0.005** at MTTF 0.573 years
	Compared to		0.005 using R8 above

Validity Check for Reliability Model

Total Hazard Failure Rate (λnet from B.S. Dhillon, pg. 39)= 281 or MTTF = 3553 hours = 0.4 years 0.862

Which Should Corresponds to a Reliability of **0.862** at a time of 528 hours

Calculated Scale Factor (θ)= 50 3 years MTTF

Developed a System Reliability and Maintenance Cost Analysis Methodology

A consistent methodology has been prepared to eventually use MTBF test data and maintenance experience to compare piston and centrifugal reliability and maintenance performance for hydrogen compression

Analysis uses FERC data as reported in several studies by Dr. Anthony Smalley, *et al.* in a paper entitled: "Evaluation and Application of Data Sources for Assessing Operating Costs for Mechanical Drive Gas Turbines in Pipeline Service (Vol. 122, July 2000, Transactions of ASME) and "Benchmarking the Industry: Factors Affecting Compressor Station Maintenance Costs" by John Harrell, Jr. and A. Smalley of Southwest Research Institute (a presentation at the GMRC Gas Machinery Conference, October 2000).

CONCEPTS NREC

Anti-Surge Control Model Algorithm for Emergency Shutdown

- **Enables the sizing of Anti-surge Control Valve and Downstream Piping**

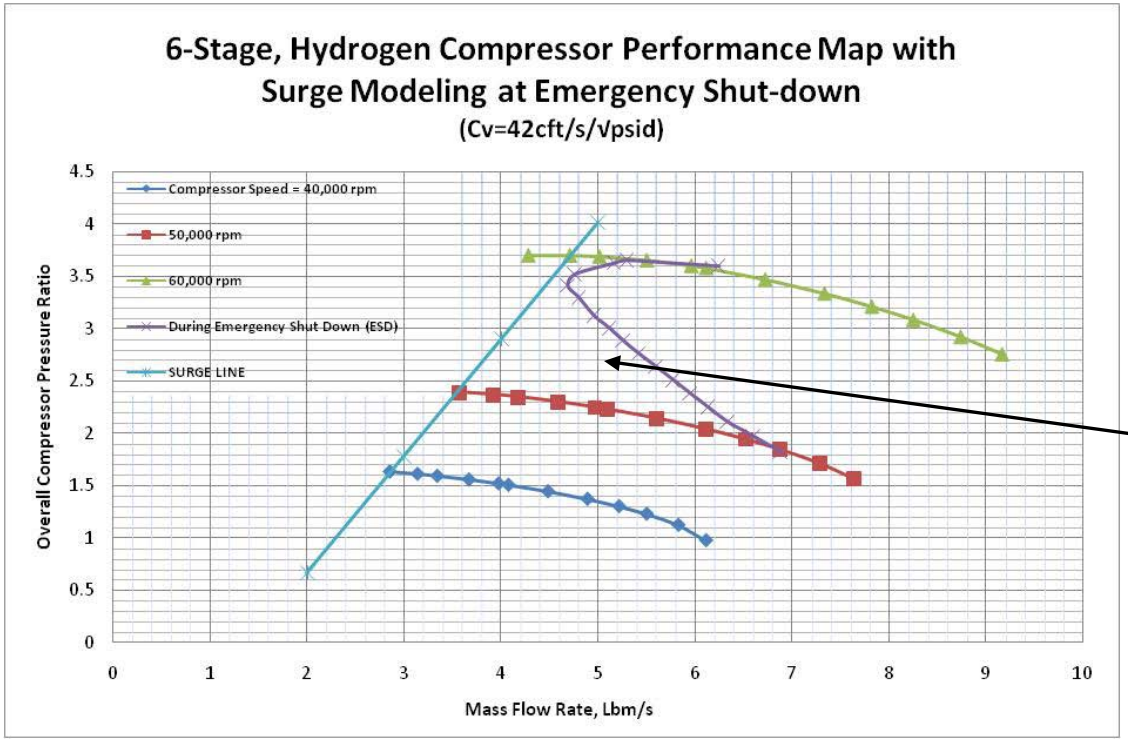

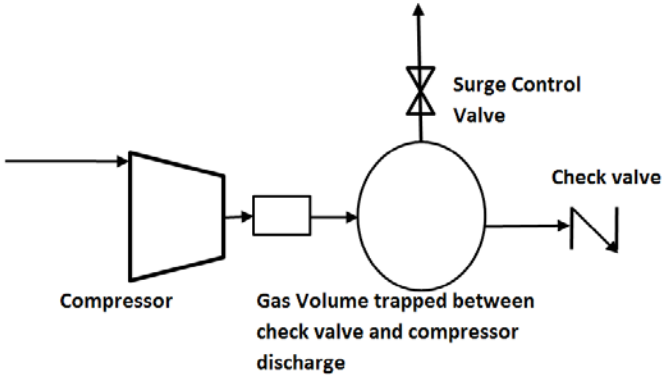

Pressure ratio & flow rate path of compressor as it almost exceeds surge control with valve Cv=42

CONCEPTS NREC

General Piping and Instrumentation Flow Diagram for Hydrogen Compressor System

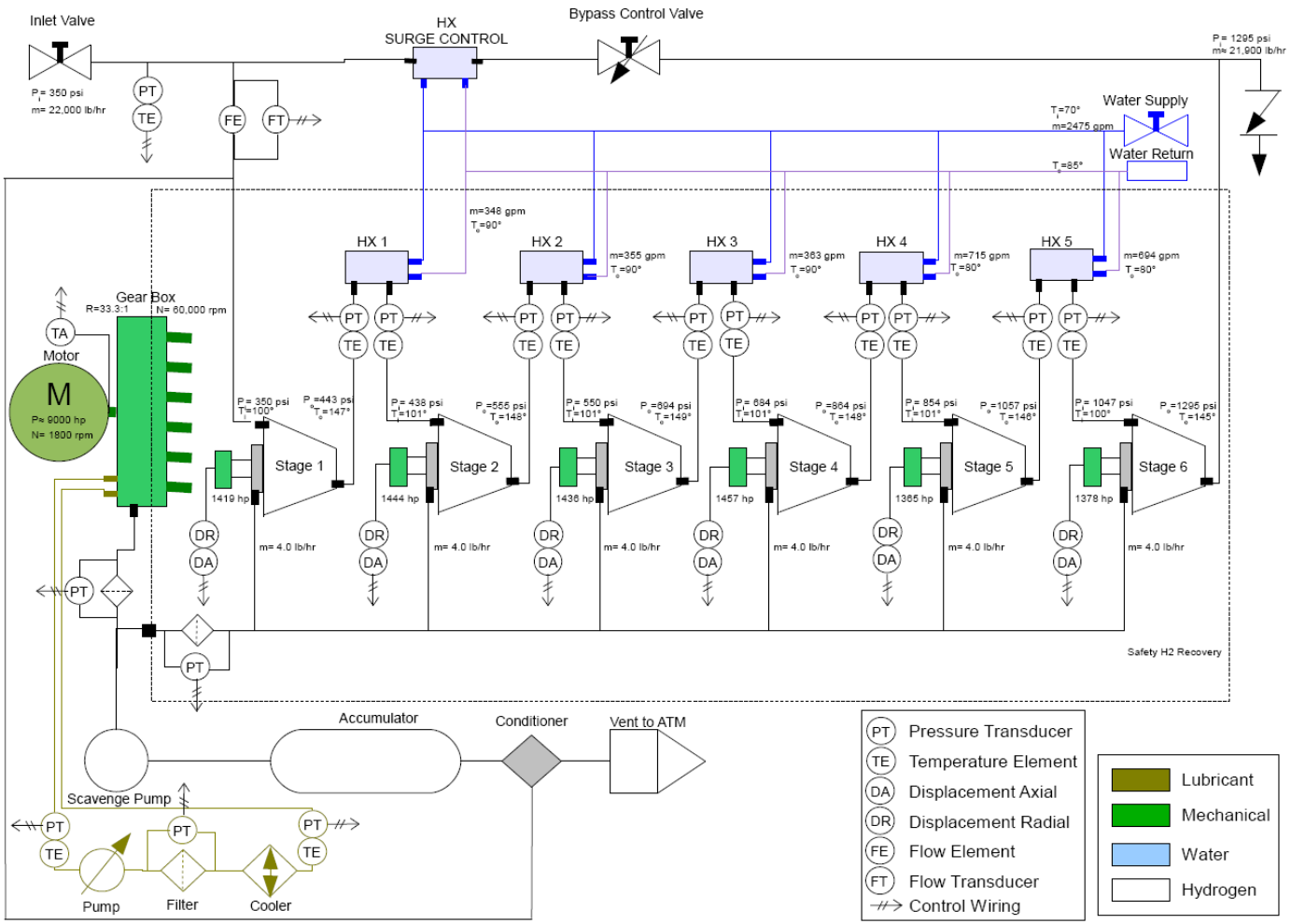

CONCEPTS NREC

Design Experience Associating Material Properties with Tip Speed of 2200 ft/s with Aluminum Alloy - 2

Literature Survey (Rocketdyne Lab Tests for NASA) and reviews with materials researchers at national labs and private consultants indicate Aluminum Alloy shows no effect from hydrogen …. AND aluminum is an excellent structural material for high-speed impellers based on specific strength (ultimate strength/density)

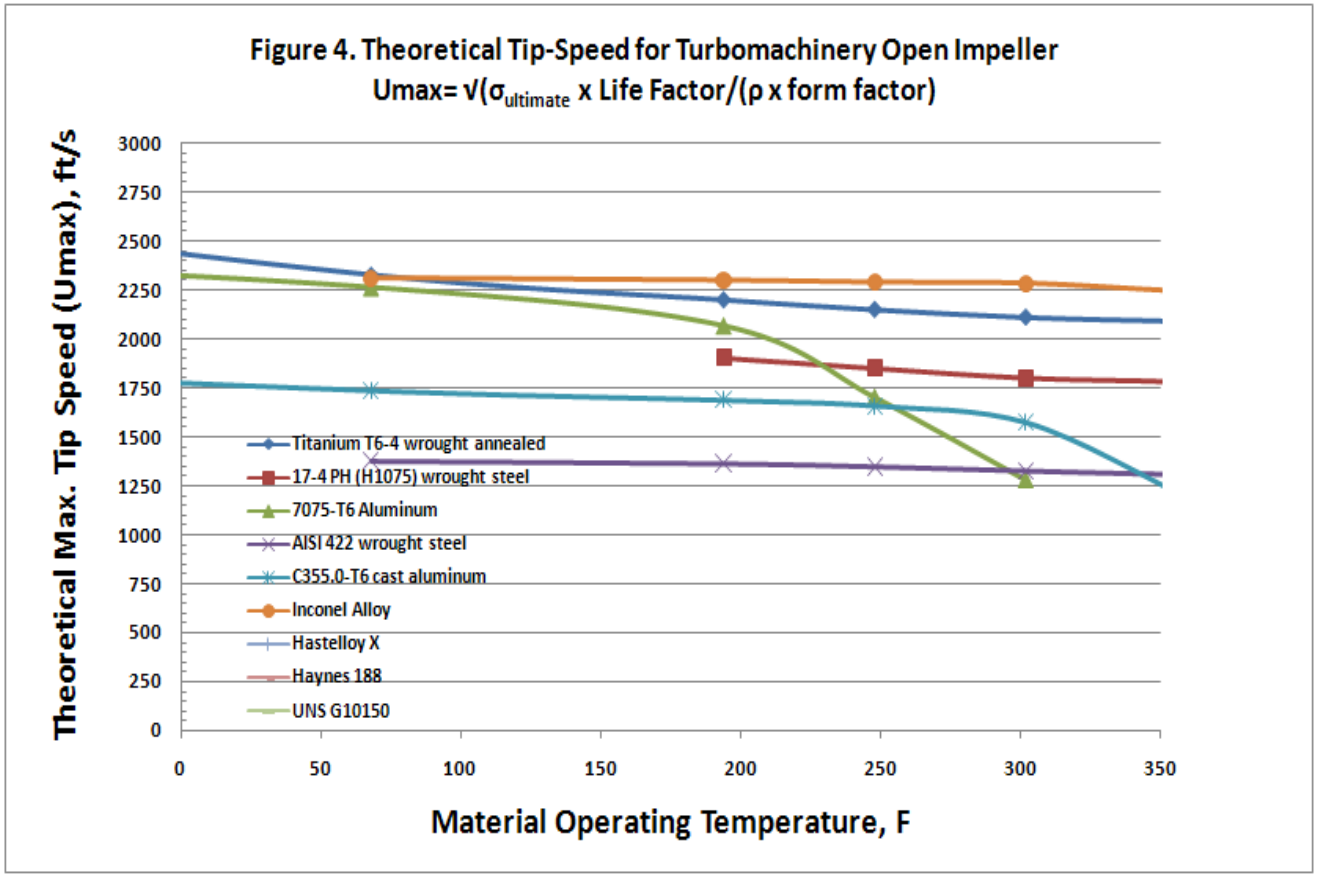

CONCEPTS NREC

Project Objectives – Relevance to DOE Hydrogen Economy Planning

DOE-stated Technical Barriers and Objectives to Establishing Hydrogen as Viable Alt. Fuel as expressed in the Delivery (Section 3.2) of the *"Hydrogen, Fuel Cells and Infrastructure Technologies Program Multi-year Research, Development and Demonstration Plan"*

- **Develop and demonstrate an advanced centrifugal compressor system for high-pressure hydrogen pipeline transport to support DOE's strategic hydrogen economy infrastructure plan**
- **Deliver 100,000 to 1,000,000 kg/day of 99.99% hydrogen gas from generation site(s) to forecourt stations**
- **Compress from 350 psig to 1,000 psig or greater**
- **Reduce initial installed system equipment cost to less than $9M (Compressor Package of $5.4M) for 200,000 kg/day system by FY 2017**
- **Reduce package footprint and improve packaging design**
- **Achieve transport delivery costs below $1/GGE**
- **Reduce maintenance cost to below 3% of Total Capital Investment by FY 2017**
- **Increase system reliability and thus avoid purchasing redundant systems**
- **Maintain hydrogen efficiency (as defined by DOE) to 98% or greater**
- **Reduce H2 Leakage to less than 0.5% by FY 2017**

Mechanical Detail of Compressor Stage
All Stages Have the Same Mechanical Design

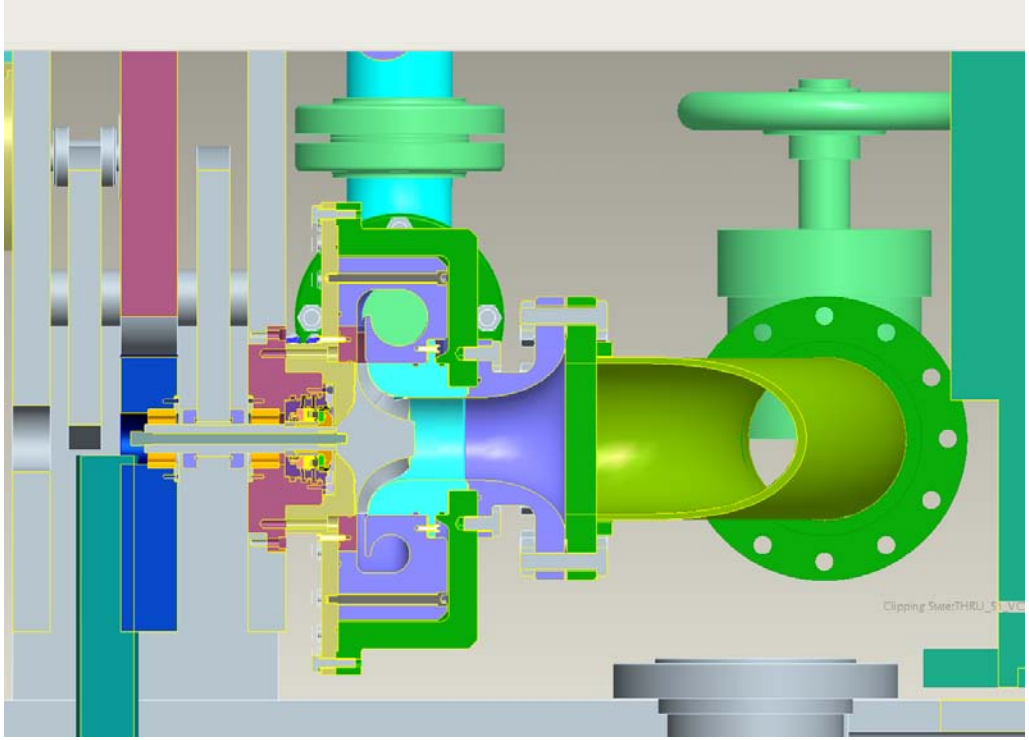

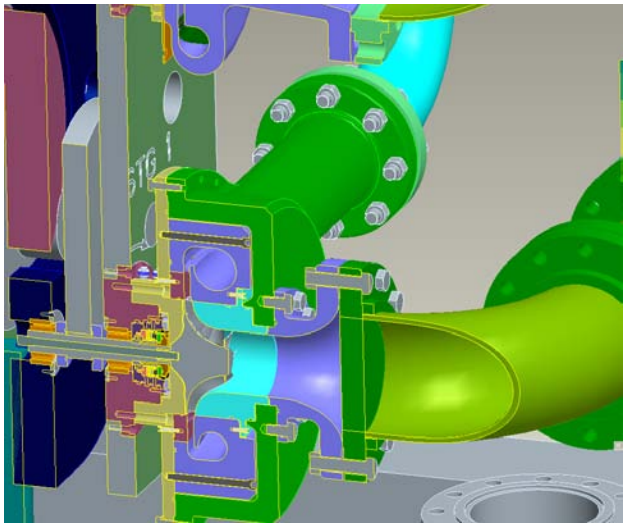

Major Compressor System Components: Gearbox

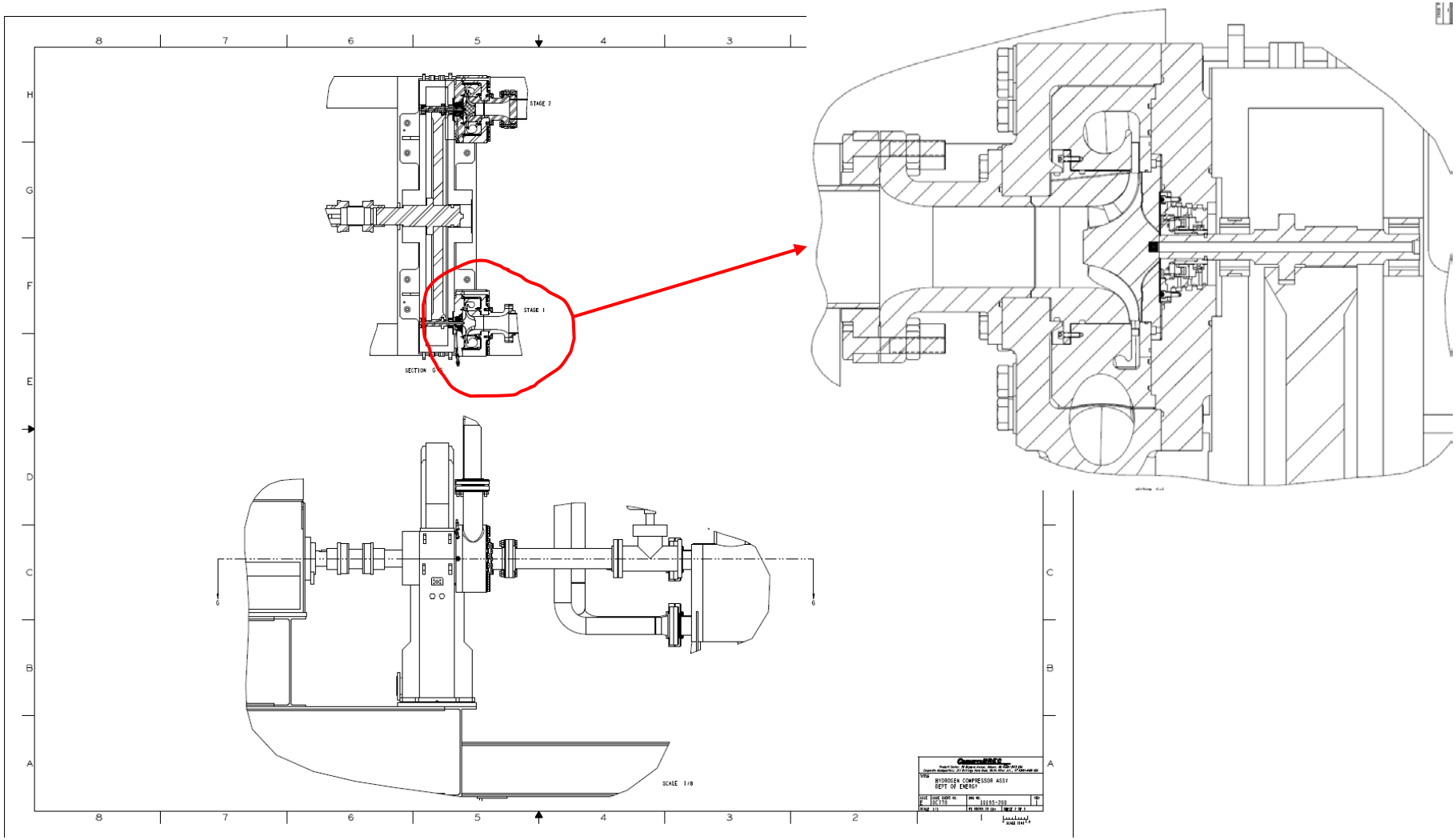

Operating Conditions Applied for Stage Six

- **Material properties: Nitronic 50 (Volute Casing and Backplate)**
  - Elastic Modulus = 2.8 E7 PSI
  - Poisson's Ratio = 0.30
  - Density = 0.285 lb/in^3
  - Yield Strength (Fty) = 57 KSI
  - Operating Pressure = 1280 PSI
  - HydroTest Pressure = 1920 PSI

- **Material properties: Aluminum 7075 (Volute)**
  - Elastic Modulus = 1.03 E7 PSI
  - Poisson's Ratio = 0.33
  - Density = 0.1000lb/in^3
  - Yield Strength (Fty) = 66.5 KSI
- **Geometry:**
  - Volute Assembly = from Pro/ENGINEER®

A Detailed Mass Model Was Created for Compressor Rotor-Drive Shaft Rotordynamics That Included Cross-Coupling Aero Effects

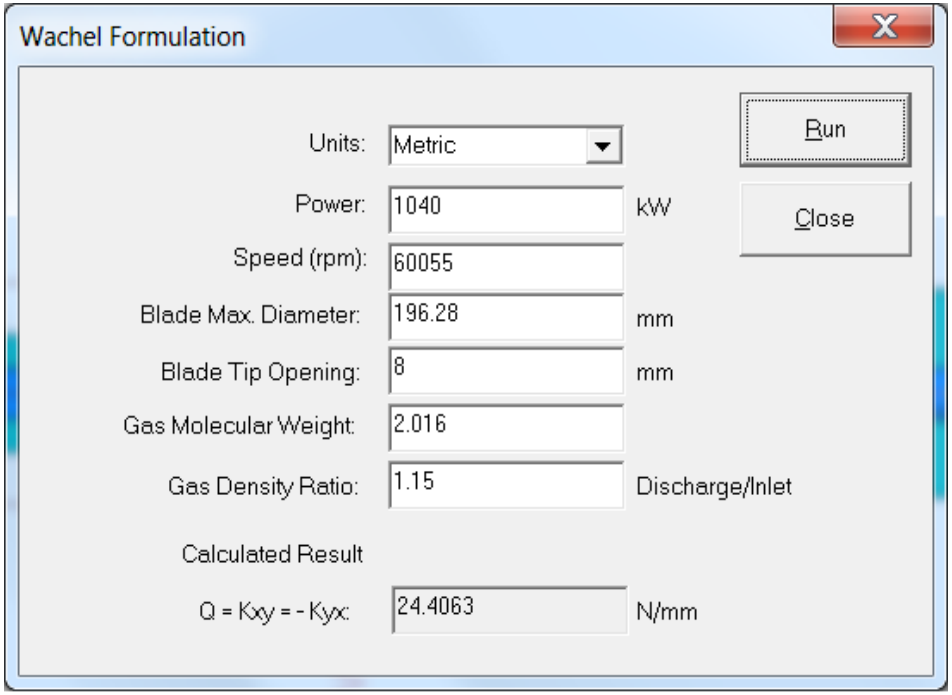

Small Punch Test Apparatus by TAMU to Determine Effects of Hydrogen Exposure

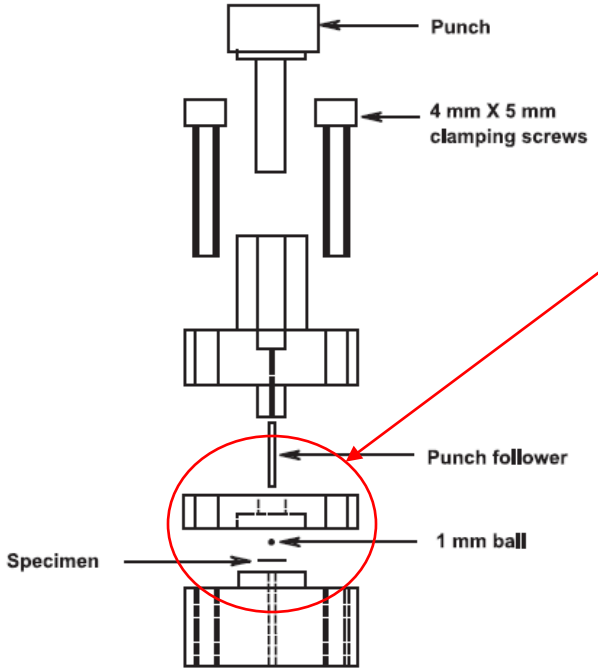

Fig. 1. Schematic diagram showing the test jig to test disc specimens 3 mm in diameter and 0.25 mm in thickness.

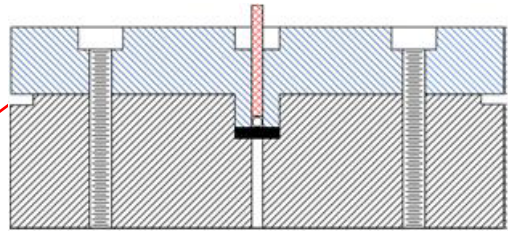

Specially machined fixture for small hole punch testing of metal specimens for project tests at speeds of 0.0021 mm/s

The following figures have been reproduced from the three technical papers that have used the technique to test materials.

Sources:

1. Klevtsov, I., "Using Small Punch Test for Determination of Tensile Properties of Steel," 6th International DAAAM Baltic Conference, April 2008.

2. Song, S. H. *et al.*," Small Punch Test Evaluation of Neutron-Irradiation-Induced Embrittlement of a Cr-Mo Low-Alloy Steel," ELSEVIER, 53: 35-41, 2004.

3. Lee, J., *et al.*, "Application of Small Punch Test to Evaluate Sigma-Phase Embrittlement of Pressure Vessel Cladding Material," Journal of Nuclear Science and Technology, 40(9): 664-671, 2003.

Summary Details of Small Punch Test by TAMU

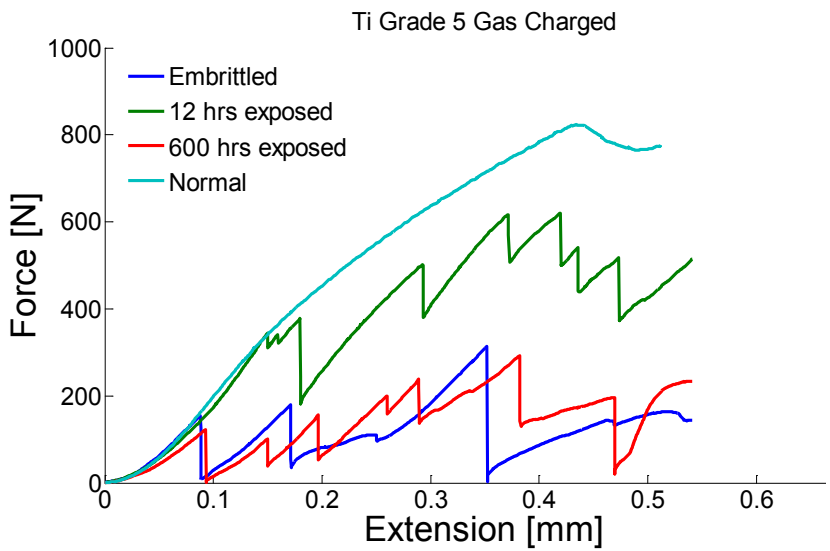

Actual Test Result with Ti Grade 5 showing degradation of strength in hydrogen over time

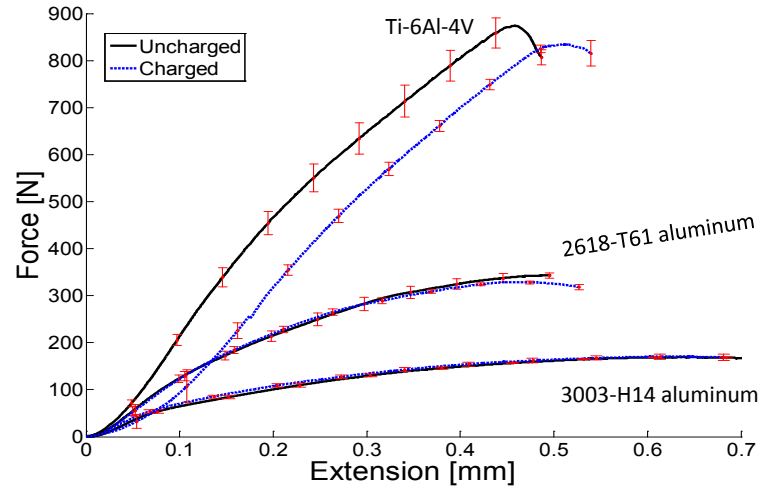

Home-made H charge system, soaking samples in a H_2 containing reservoir.

Force vs. Extension curve showing how the mechanical strength of the Ti-6Al-4V specimens changes over time at room temp. after charging BUT Aluminum specimens are not affected

Results of Testing Charged AL 7075 Specimens vs. Normal

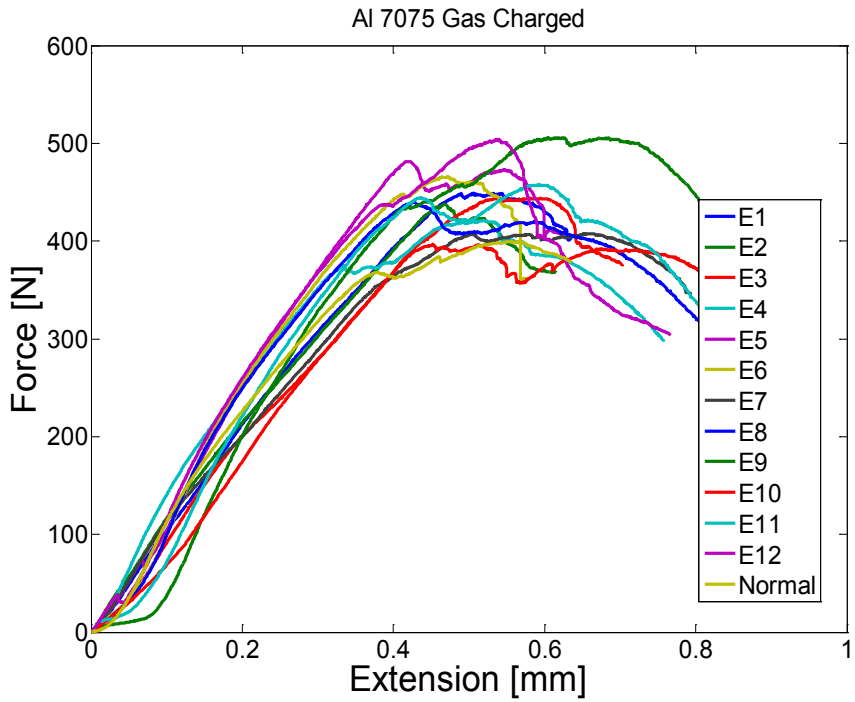

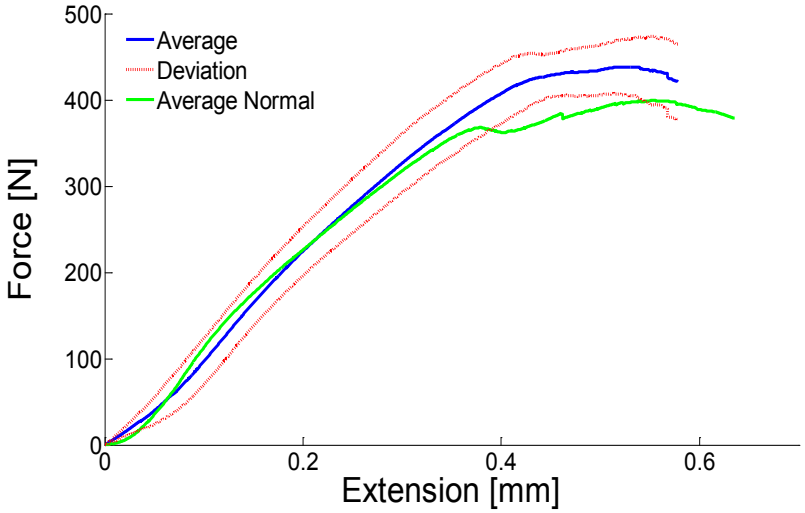

CONCLUSION FROM TESTING:

1. **Small Punch Test Methodology can discern relative strength of a materials resistance to hydrogen embrittlement**
2. **Results without coating now can serve as a baseline for testing (in progress) specimens with coatings**