# Development of High Pressure Hydrogen Storage Tank for Storage and Gaseous Truck Delivery

Don Baldwin, Principal Investigator/Presenter
Hexagon Lincoln
June 17, 2014

Project ID#
PD021

This presentation does not contain any proprietary, confidential, or otherwise restricted information

# OVERVIEW

HEXAGON LINCOLN

## Timeline

- Project start date: July 2008
- Project end date: June 2015

## Budget

- Total funding spent: $3.96M*
- Total project value: $4.55M
- Cost share percentage: 39%
- FY13 DOE Funding: $0
- FY14 DOE Funding: $617K (planned)

* As of 31 March 2014

## Barriers

- Barriers addressed

  **E.** Gaseous Hydrogen Storage and Tube Trailer Delivery Costs

  **I.** Other Fueling Site/Terminal Operations

## Partners

- Discussions with ABS on pressure vessel qualification
- Discussions with US DOT regarding Special Permits for modules and trailers in USA
- Discussion with and input to ARNL for Hydrogen Refueling Station Cost Reduction
- Extensive testing at Powertech Labs and Stress Engineering Services

HEXAGON LINCOLN

## RELEVANCE

- **Relevance: to reduce the cost of a near-term means of transporting gaseous $H_2$ from the production or city gate site to the station.**
  - Design and develop the most effective bulk hauling and storage solution for hydrogen in terms of cost, safety, weight, and volumetric efficiency. This will be done by developing and manufacturing a tank and corresponding ISO frame that can be used for the storage of hydrogen in a stationary or hauling application. Complete 4Q 2009.
  - Based on current knowledge of tube trailer design, carry out preliminary design and qualify a 3600 psi tank and ISO frame that will hold 510000 $in^3$ (~8500L) water volume. Complete 4Q 2009.
  - Complete trade studies needed to increase vessel capacity by increasing pressure to 5000 psi (ultimately exceeds the DOE's FY10 capacity target by >15%). Complete 1Q 2011.
  - Complete the enhancement of the 250 bar system with respect to capacity (> 700 kg/liter) and safety (fire protection). Complete 4Q 2012.

HEXAGON LINCOLN

# OBJECTIVES-TECHNICAL TARGETS 2010/2015*

| Hydrogen delivery targets | ISO container with four 3600 psi tanks (FY 2009 Work Scope) |
|---|---|
| $500/kg of hydrogen stored by FY2010, $300/kg by FY2015 | The TITAN Module, with four tanks installed, met the $500 per kg hydrogen objective in 2010. However, since 2010 increases in market prices for materials of construction (specifically carbon fiber and specialty forgings) have forced us to increase our current pricing to about $800/kg (1Q 2013). [We have strong domestic and international sales of our high-capacity modules and trailers at this price level for CNG.] |
| Volumetric capacity 0.03 kg/liter by FY2010, >0.035 kg/liter by FY 2015 | The baseline tank has a capacity of 150 kg hydrogen in a volume of ~8500 liters, achieving a performance of ~0.018 kg/liter. |
| Tube trailer delivery capacity 700 kg by FY2010 and 1,140 kg by FY2017 | The current ISO assembly, with four tanks installed, will contain approximately 616 kg of hydrogen. At 90% hauling efficiency, delivery of 555 kg of hydrogen |

* Based on the Fuel Cell Technologies Office 2007 MYRD&D

HEXAGON LINCOLN

# OBJECTIVES-TECHNICAL TARGETS 2015/2020

| Hydrogen delivery targets | ISO container with four 3600 psi tanks (FY 2009 Work Scope) |
|---|---|
| $730/kg of hydrogen delivered by FY2015, $575/kg by FY2015 | The TITAN Module, with four tanks installed, met the $500 per kg hydrogen objective in 2010. However, since 2010 increases in market prices for materials of construction (specifically carbon fiber and specialty forgings) have forced us to increase our current pricing to about $800/kg (1Q 2013). [We have strong domestic and international sales of our high-capacity modules and trailers at this price level for CNG.] |
| Delivery Pressure 400 bar by FY2015, 520 bar by FY2020 | The current delivery pressure is 250 bar. Design and trade studies have been performed which indicate that a delivery pressure of 350 bar is optimal for TITAN modules/trailers. Higher pressures are achievable but would require extensive redesign and retooling of the manufacturing infrastructure. ARNL is currently conducting trade studies to determine optimized tube trailer configurations using a consolidation approach combining small high-pressure (>500 bar) tanks with large 250 bar tanks. |
| Tube trailer delivery capacity 700 kg by FY2015 and 940 kg by FY2020 | The Titan module system, (four large tanks) contains approximately 616 kg of hydrogen. At 90% hauling efficiency, delivery of 555 kg of hydrogen<br>The Titan V Magnum, (5 large tanks and 9 small tanks) contains approximately 800 kg of hydrogen. At 90% hauling efficiency, delivery of approximately 720 kg of hydrogen.<br>The Titan V XL40 ( 5 large tanks and 7 medium tanks) is being developed and will contain approximately 890 kg of hydrogen. At 90% hauling efficiency, delivery of approximately 800 kg of hydrogen. |

# APPROACH/MILESTONES

HEXAGON LINCOLN

**Task 1.0 Develop and Qualify a 3600 psi Tank**

- Design and qualify 8500 liter tank
- Focus on large tank manufacturing
- **Completed 4Q 2009**
- Characterize interaction of CHG with tank under deep cycling prior to use in CHG service
- **Expected Completion 4Q 2014**

**Task 2.0 Develop and Qualify an ISO Frame**

- ISO container to hold four tanks with a combined capacity of 600 kg of hydrogen
- **Completed 3Q 2009**
- **DOT SP obtained in 1Q2012**
- **Pursuing DOT SP approval for larger volume trailer systems**
- **Expected Completion 1Q 2015**

**Task 3.0 5000 psi Trade Study**

- A higher pressure tank will be required to meet DOE goals
- Initial review suggest a 5000 psi tank will be the most cost effective
- **Completed 1Q 2011**

**Task 4.0 Develop and Qualify a 5000 psi Tank**

- This task is no longer being pursued.
- Lack of market definition in regards to working pressure 5000 or 7250 psi and forecasting of market size.
- High testing costs ~$5 million to fully qualify.

**Task 5.0 Cost Reduction Studies**

- Reduce cost
- Increase safety
- Continued development of emergency venting system
- Laboratory equipment to characterize the effects of hydrogen on polymer liners
- **Completed 4Q 2012**

**Task 6.0 Investigate Increased Capacity**

- Design and prototype a Titan5 trailer that will increase storage capacity per truck load.
- **Completed 1Q 2012**
- Optimize trailer systems to maximize capacity in target markets (including USA)
- **Completed 4Q 2012**

# TECHNICAL ACCOMPLISHMENTS/PROGRESS/RESULTS

- Completed the design, manufacture and assembly of ISO format container (standard dimensions) capable of storing ~616 kg H2 @ 3600 psi.
  - Successful completion of all qualification tests for a 3600 psi pressure vessel per ABS Document No. ABSHOU557163
  - Completed Testing of Container per CSC 49 CFR Part 451
  - DOT Special Permit 14951 issued 22 February 2012
- 2013 saw continued evolution of module functionality and safety systems with accumulation of field experience in CNG service
  - Different jurisdictions
  - Different environments

Gaining real world experience in fuel gas distribution

# TECHNICAL ACCOMPLISHMENTS/PROGRESS/RESULTS

## HEXAGON LINCOLN TITAN™ Module System

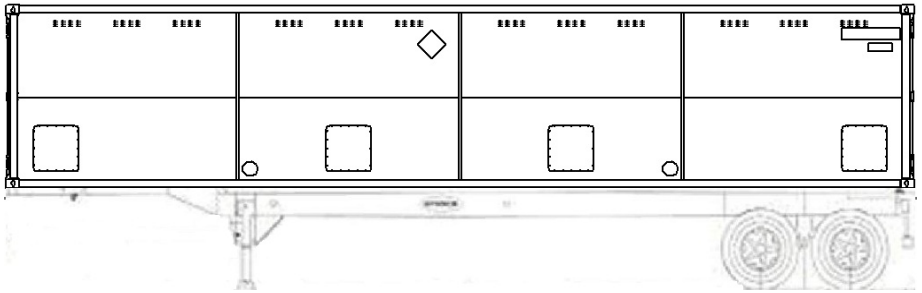

Compressed Hydrogen Gas

- Capacity
  - 250 bar – 616 kg (554 kg delivered)
  - 350 bar – 809 kg (728 kg delivered)
  - 540 bar – 1155 kg (1040 kg delivered)
- Gross Vehicle Weight (GVW)(with prime mover)
  - 250 bar – 28 450 kg
  - 350 bar – 30 820 kg
  - 540 bar – 39 440 kg

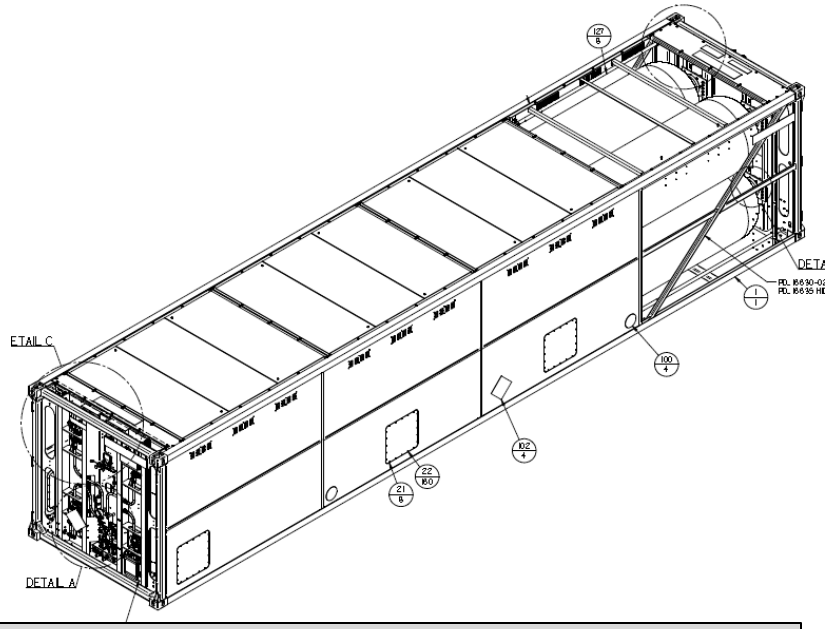


Compressed Natural Gas

- Capacity (250 bar at 15° C) – 7412 kg
- GVW (With prime mover) – 35 250 kg

Highly modular system with increased volume and light weight

HEXAGON LINCOLN

# TECHNICAL ACCOMPLISHMENTS/PROGRESS/RESULTS

- Completed the design, manufacture and assembly of integrated TITAN V Magnum trailer system capable of storing ~800 kg H2 @ 3600 psi.
  - Maximum width and height allowed on Interstate Highway System
  - Gross Vehicle Weight within limits for Interstate up to 350 bar
- 2013 saw first deployment of TITAN V Magnum systems in CNG service
  - Very good handling characteristics (low center of gravity) and functionality
- 2014 extension to TITAN V XL40 will increase storage to ~890 kg H2 @ 3600 psi

Our first trailer systems are performing well in CNG service

# TECHNICAL ACCOMPLISHMENTS/PROGRESS/RESULTS

## HEXAGON LINCOLN TITAN™ V Magnum Trailer System

Compressed Hydrogen Gas

- Capacity
  - 250 bar – 800 kg (720 kg delivered)
  - 350 bar – 1050 kg (907 kg delivered)
  - 540 bar – 1500 kg (1350 kg delivered)
- GVW (with prime mover)
  - 250 bar – 31 000 kg
  - 350 bar – 34 200 kg
  - 540 bar – 45 700 kg

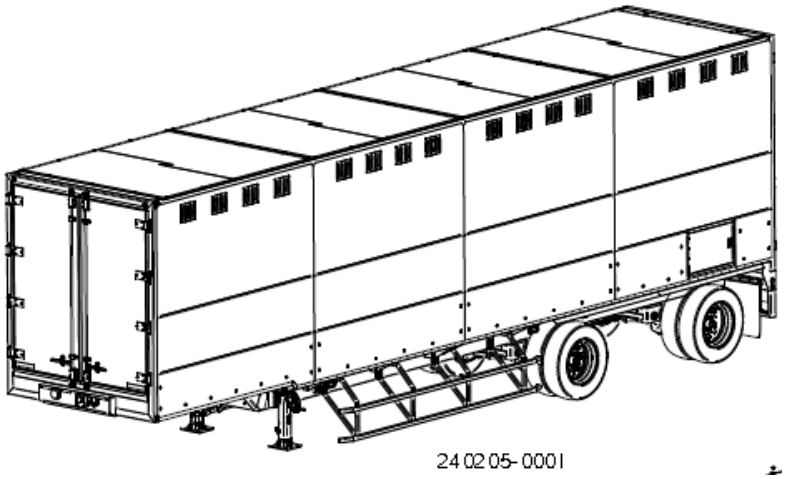


Compressed Natural Gas

- Capacity (250 bar at 15 C) – 9649 kg
- GVW (With prime mover) – 39 830 kg

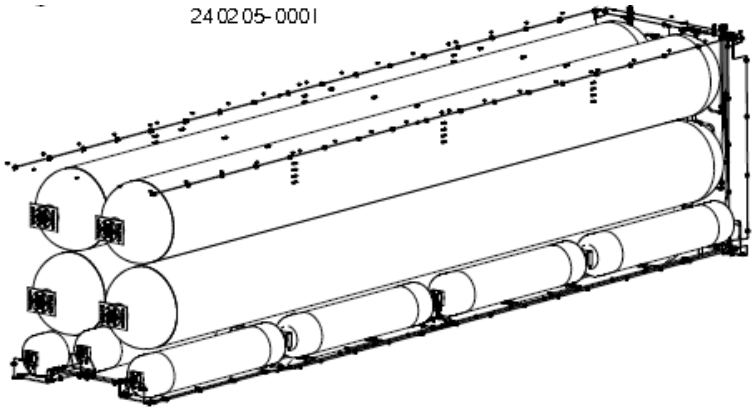


Integrated trailer system allows increased lading with excellent roadability

HEXAGON LINCOLN

## TECHNICAL ACCOMPLISHMENTS/PROGRESS/RESULTS

- Trade Studies Performed to Maximize Cost Effectiveness of Modules/Trailers
- More Hydrogen Capacity and Lower GVW Reduce Operating Expenses
- 350 bar TITAN™, TITAN V Magnum™ and TITAN V XL40 Systems Would be a Logical Next Step
  - 2.4 SR Design Fits ISO Frame and Trailer Widths
  - From .018 to .024 kg $H_2$ per Liter
  - Increased Payload
    - 616 to 816 kg $H_2$ Capacity for TITAN™
    - 801 to 1051 kg $H_2$ Capacity for TITAN V Magnum™
    - 889 to 1205 kg $H_2$ Capacity for TITAN V XL40
  - 5% reduction in $ per kg $H_2$ [capital expenditure for rolling stock only]

350 bar operation would be optimal for module and trailer efficiency

HEXAGON LINCOLN

## TECHNICAL ACCOMPLISHMENTS/PROGRESS/RESULTS

- Practical Limit in Industry is 350 bar
  - Higher pressures exacerbates thick-wall effects in pressure vessel and reduces strength translation
  - Limited availability of high-flow gas management components at higher pressures
  - Availability/reliability of high-volume $H_2$ Compressors
- Need Solid Definition of Market Size and Operating Parameters [i.e.; 350 bar vs 540 bar] before a Business Case Can be Made for Investment in Qualification at a Higher Pressure
- ARNL is currently conducting trade studies to determine optimized configurations for tube trailers using a consolidation approach with a mix of 250 bar and high-pressure tankage

Operational and business issues are being studied. Answers soon?

# TECHNICAL ACCOMPLISHMENTS/PROGRESS/RESULTS

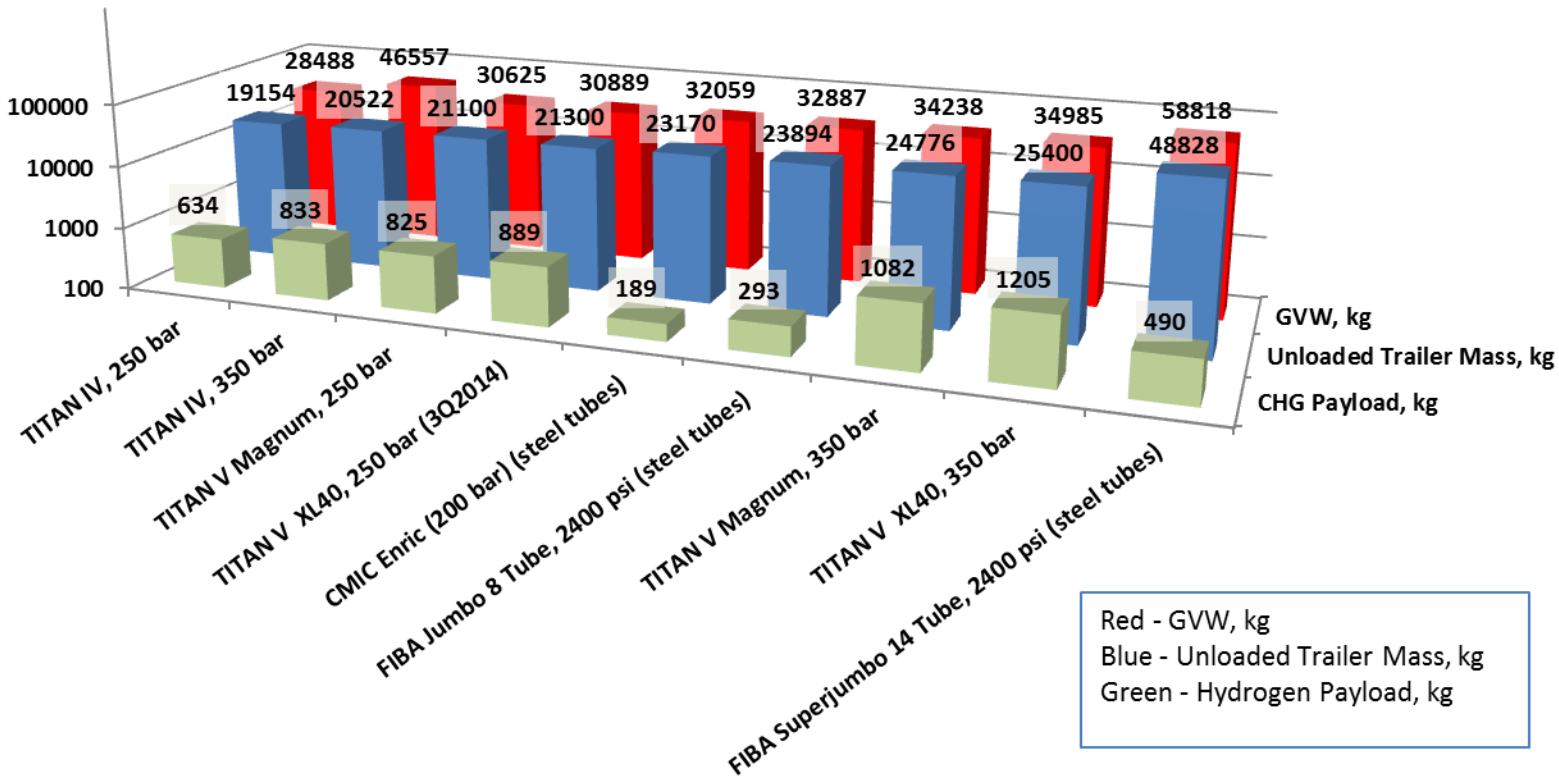


TITAN systems are raising the bar for fuel gas transport

# COLLABORATIONS

HEXAGON LINCOLN

- American Bureau of Shipping on qualification of existing and potential changes to composition of current pressure vessels.
- Lincoln Composites has received Special Permit from the U.S. DOT authorizing the manufacture, making, sale and use of the Titan bulk hauling 4 cylinder module in February 2012.
- Discussion with and input to ARNL for Hydrogen Refueling Station Cost Reduction studies
- Lincoln Composites has initiated Special Permit discussions with U.S. DOT towards authorizing the manufacture, making, sale and use of the Titan 5  bulk hauling trailer systems
- Extensive testing activities
  - Powertech Labs
  - Stress Engineering Services

# REMAINING CHALLENGES AND BARRIERS

HEXAGON LINCOLN

- Experience with deep cycling of TITAN pressure vessels with CHG is needed to define operating protocols for use of TITAN systems in CHG service at 250 bar

- U.S. DOT Special Permit approval is needed prior to the manufacture, making, sale and use of Titan V trailer systems in the United States

# FUTURE WORK

HEXAGON LINCOLN

- A program of deep cycle testing of TITAN pressure vessels with CHG will be performed in 2Q and 3Q 2014
  - Characterize CHG-specific operating protocols for use of TITAN systems in CHG service at 250 bar
- Hexagon Lincoln will prepare and submit an application for Special Permit approval with U.S. DOT for the manufacture, making, sale and use of Titan V trailer systems in the United States
  - Initial discussions with DOT indicate structural testing is required

# NO PROJECT FUNDS USED IN 2013

HEXAGON LINCOLN

- Focus in 2012 and 2013 has been on deployment of TITAN modules and trailers in CNG service
  - Real world experience in fuel gas transportation
  - Coordination and consultation with public safety officials
    - Emergency response plans
    - Plume analysis/dispersion studies
  - Extremes of environmental conditions (weather, roads, etc)
  - Extremes of operation (chilling, no chilling, gas constituents)
  - Valuable feedback from users (positive and negative)
- Hexagon Lincoln and FCT Office have reached full agreement on use of remaining project funds
  - Deep cycle testing of TITAN pressure vessels with CHG
  - Application for Special Permit approval with U.S. DOT for the manufacture, making, sale and use of the Titan V Magnum trailer systems

# SUMMARY

- **Hydrogen delivery and storage are key to the roll out of PEMFC technology**
- **Low cost, near-term delivery pathways such as tube trailer transport will enable early adoption of these technologies**
- **Developing a bulk storage unit that can be transported on an ISO frame or integrated into a trailer is a critical part of this strategy**

| Technical Targets | |
|---|---|
| **DOE Goals** | **Estimated Results** |
| $500/kg of hydrogen stored by FY2010, $300/kg by FY2015 | 3600 psi - $500 per kg of H2 |
| Volumetric capacity 0.03 kg/liter by FY2010, >0.035 kg/liter by FY 2015 | Current 3600 psi tank – 0.018 kg/liter |
| Tube trailer delivery capacity 700 kg by FY2010 and 1,100 kg by FY2017 | 3600 psi (4-tube ISO container) - contains 616 kg of hydrogen, 555 kg deliverable at 90% efficiency. |
| Tube trailer delivery capacity 700 kg by FY2015 and 940 kg by FY2020 (DRAFT) | 3600 psi (4-tube ISO container) - contains 616 kg of hydrogen, 555 kg deliverable at 90% efficiency.<br>3600 psi (5-tube trailer with additional 9 tanks) – contains 800 kg of hydrogen, 720 kg deliverable at 90% efficiency.<br>3600 psi (5-tube trailer with 7 intermediate tanks) – to contain 890 kg of hydrogen, 800 kg deliverable at 90% efficiency. |
| Tube trailer operating pressure goal is <10,000 psi by FY2012 | Current module configuration is 3600 psi |