Hands-on Hydrogen Safety Training

Project ID: SCS017

Gregg Holtmeier, Salvador Aceves

Lawrence Livermore National Laboratory

June 9, 2015

This presentation does not contain any proprietary, confidential, or otherwise restricted information

Overview

Timeline and budget

- Project start date: **Sept. 2012**
- **FY14 DOE Funding: $50k**
- **FY15 Planned DOE Funding: $50k**
- **Total DOE funds received to date: $250k**

Barriers

- **Limited access and availability of safety data and information**
- **Limited availability of hardware training**

Partners

- **Detailed class peer review in collaboration with Hydrogen Safety Panel**

Relevance: Appropriate H_2 safety training is key to avoiding accidents

- *214 listings on H_2 Lessons Learned web page*
- *Overall Objective* – **Develop H_2 safety training program for laboratory researchers and technical personnel**

- *Objective this Period* – **Develop classroom materials for hands-on training course which includes comprehensive instruction on components, system design, assembly, and leak testing**

Approach: Use LLNL pressure system expertise to develop a H_2 training program contributing to reduced risk of accidents

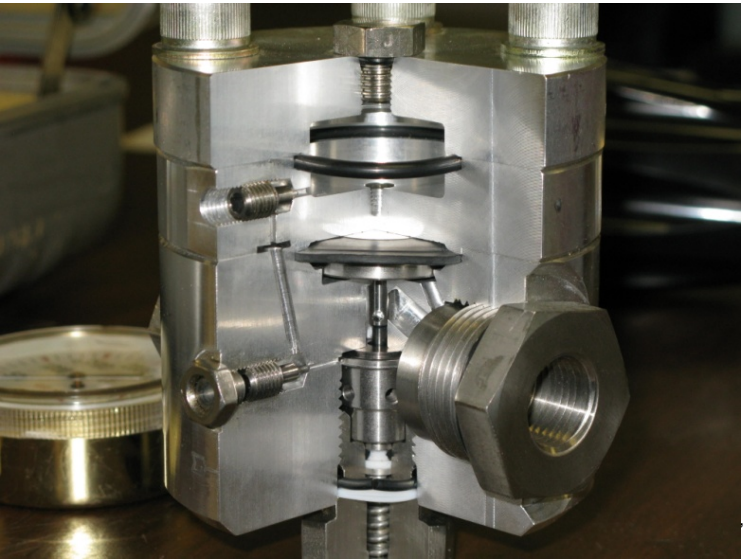

- *Web-based class* (4 hours) developed for laboratory researchers handling hydrogen (completed)
- *Hands-on safety class* (3 days) developed for technical personnel in charge of designing, assembling, and testing H_2 systems
  - FY15 Milestone – Complete classroom materials

Approach: Develop a peer reviewed web-based hydrogen safety class for researchers

- Completed
- Class duration is approximately 4 hours
- Six modules:
  - Introduction
  - Hydrogen properties
  - Pressure safety
  - Cryogenic safety
  - Emergency response
  - Codes and standards
- End of module quizzes (passing grade 85%)
- Web address: www.h2labsafety.org

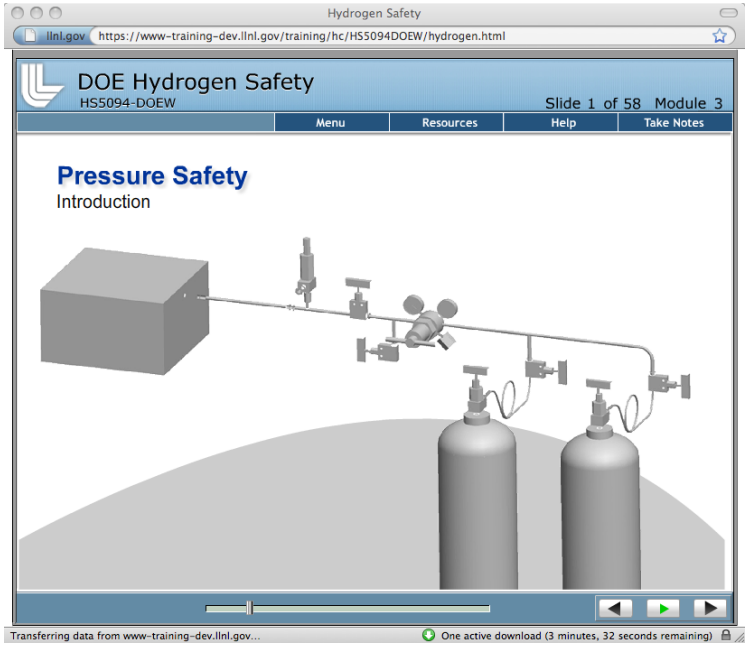

Approach - Develop a 3-day hands-on hydrogen safety class

- **Day 1 – Pressure Hardware Classroom Instruction**
- **Day 2 – Assemble Pressure System**
- **Day 3 – Test and Operate Pressure System**

Accomplishment - Web-based class has registered 400+ completions and is regular training for various organizations

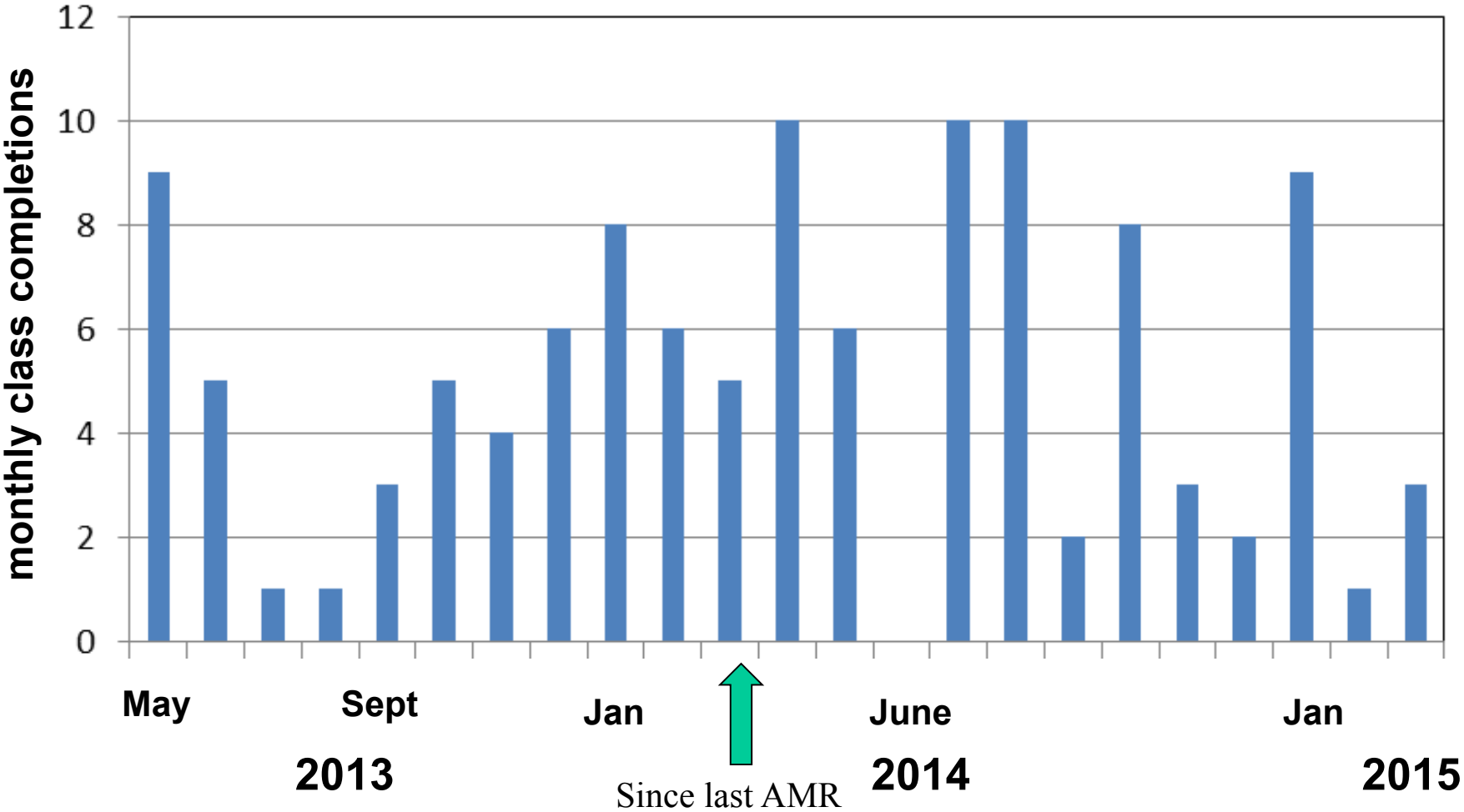

Accomplishment - We developed many cutaway training aids for classroom instruction

Assembly Board

Gas Cylinders

Regulators

Gauges

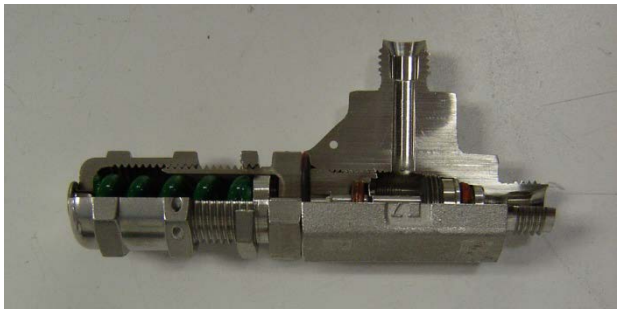

Relief Devices

Fittings

Accomplishments: Completed several sessions of class materials for first day of hands-on instruction

Session 1

1. Concepts
2. Hazards
3. Personal Protective Equipment (PPE)

Session 2

1. Gas Cylinders
2. CGA Fittings
3. Supply Manifolds
4. Flash Arrestors

Session 3 - Competed

1. Pressure Reducing Regulators

Session 4

1. Gauges/Pressure Transducers
2. Relief Devices
3. Valves

Session 5 - Completed

1. Fittings – VCR, Bite, NPT, VCO, DIN
2. Tubing and Piping

Regulator Training for Hydrogen Safety Class

12/2/2014

Salvador Aceves, Gregg Holtmeier, Vern Switzer

Lawrence Livermore National Laboratory

This work was performed under the auspices of the U.S. Department of Energy by Lawrence Livermore National Laboratory under Contract DE-AC52-07NA27344. Lawrence Livermore National Security, LLC

Regulator Training Agenda

- Operating Principals
- Regulator Types
  - Spring Loaded
  - Dome Loaded
- Loading Mechanisms
- Definitions

Pressure Reducing Regulator Function

- Reduce inlet pressure and keep outlet pressure constant while inlet pressure and flow vary

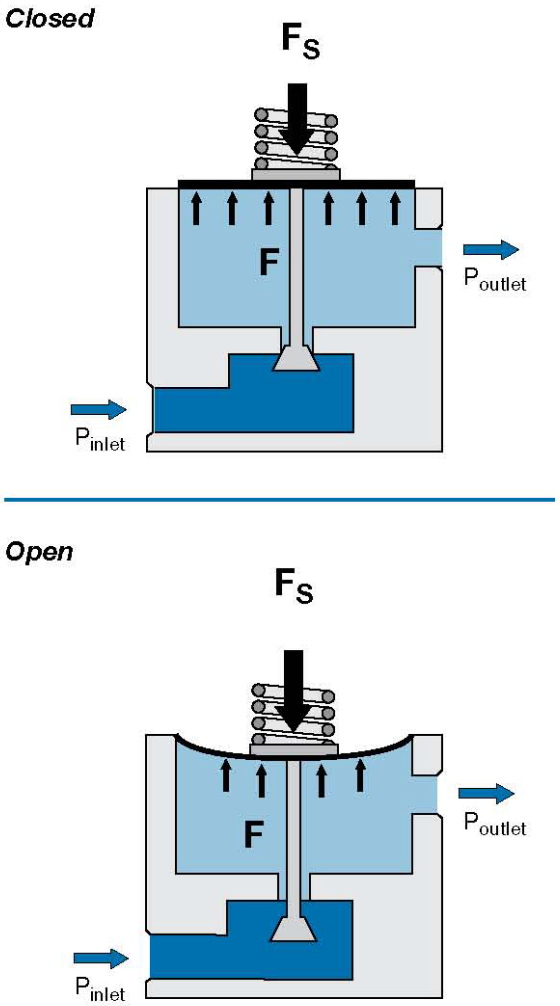

Common Regulator Types

- Spring Loaded
  - Single Stage
  - Two Stage
- Dome Loaded

Safety Manifold Components

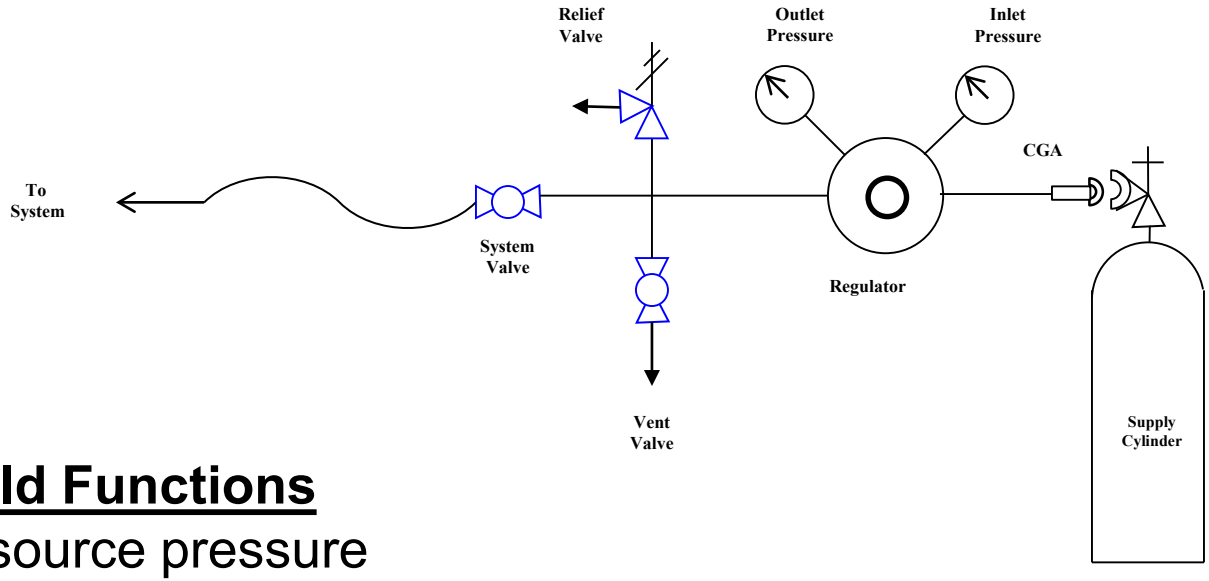

Manifold Functions

1. Reduce source pressure
2. Protect system with PRV
3. Isolate system from source
4. Vent system and manifold

Pressure Fittings Training for Hydrogen Safety Class

1/29/2014

Salvador Aceves, Gregg Holtmeier, Vern Switzer

Lawrence Livermore National Laboratory

This work was performed under the auspices of the U.S. Department of Energy by Lawrence Livermore National Laboratory under Contract DE-AC52-07NA27344. Lawrence Livermore National Security, LLC

Pressure Fittings Training Agenda

- Tube Fittings
- Tapered Pipe Thread
- VCR
- VCO
- DIN

Tube Fittings

- Two Ferrule Mechanical Grip
- Front ferrule seals
- Rear ferrule grips

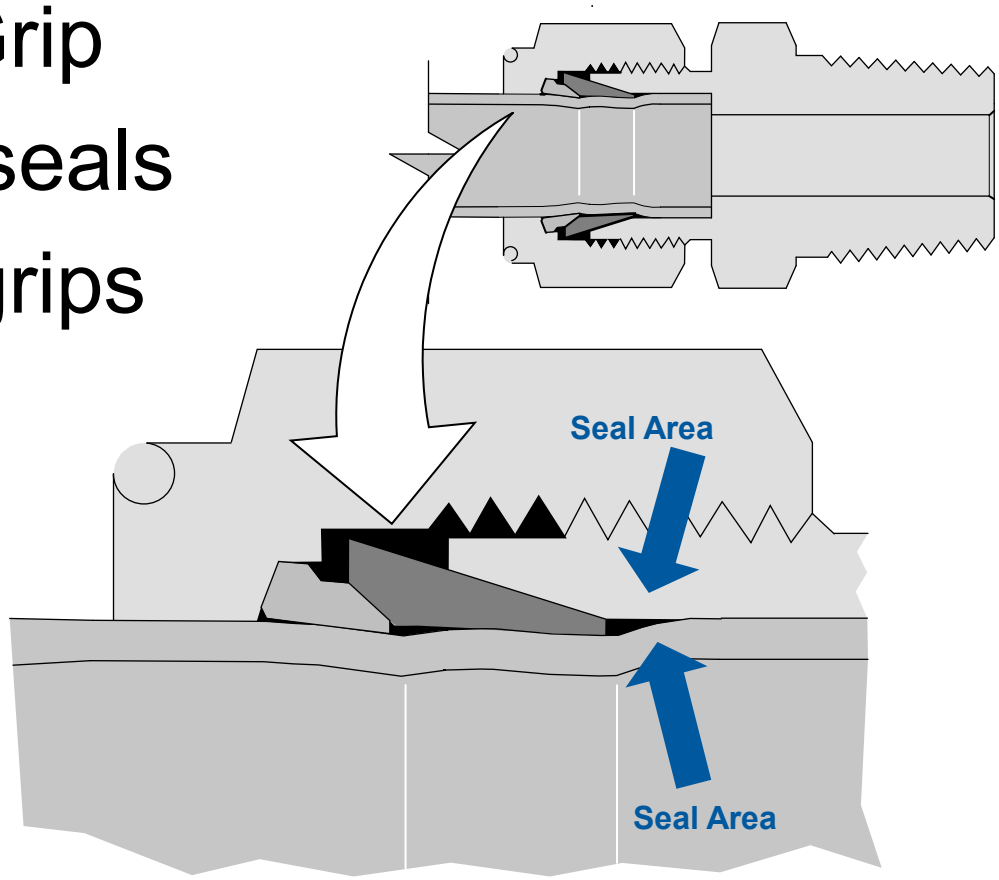

Installation Procedures

- Tube fittings are installed in four steps

1. Insert the tubing into the tube fitting

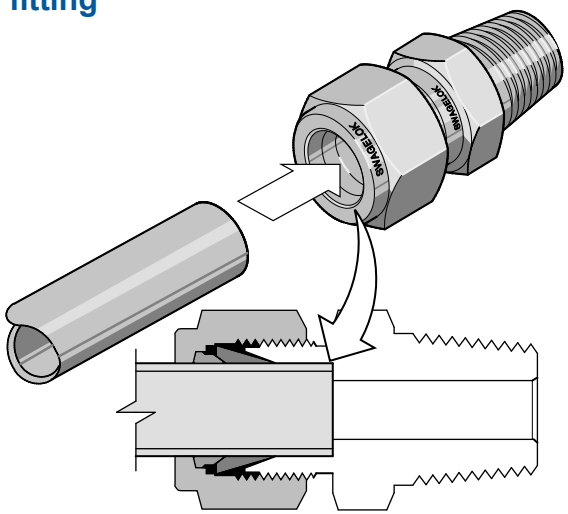

2. Make sure that the tubing rests firmly on the shoulder of the fitting body and that the nut is finger-tight.

3. Scribe the nut at the 6 o'clock position

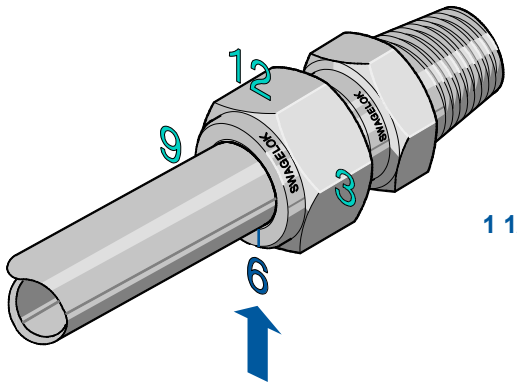

4. Hold the fitting body steady and tighten the nut 1 1/4 turns (0.25-1.0" tube)

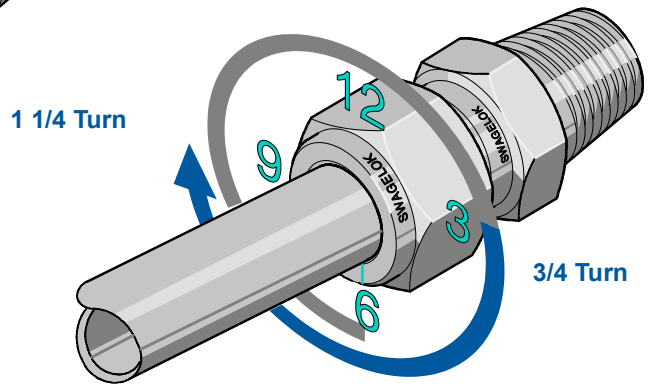

¾ turn for 1/8 inch or less tube

Tapered Pipe Thread Fittings

- NPT – National Pipe Thread Taper
- Seal made by thread interference
- Needs thread sealant
- Not used for vacuum service
- Typically Brass, Carbon Steel or SS materials
- Temperature rating is based upon material and sealant (Carbon Steel = 190 ºC)

VCR Fittings

- VCR – Vacuum Coupling Rad-Lab
- High purity metal to metal seal
- Metal gasket is compressed by 2 beads
- Vacuum, pressure, and high temp. service
- 0.25 inch (#4) fittings typically rated >5000 psi
- Female threads are silver plated to prevent galling
- Test ports for leak checking, no virtual leak zones
- Minimal axial clearance needed for assembly

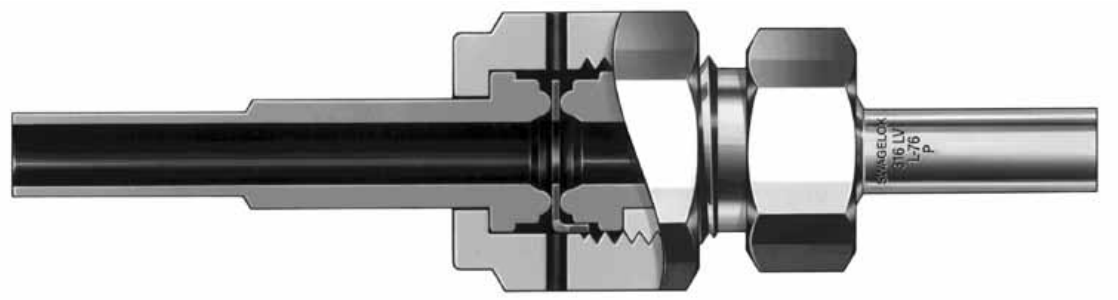

VCO Fittings

- VCO – Vacuum Coupling O-ring
- Uses captive o-ring with face seal
- Vacuum, pressure, and high temp. service
- 0.25 inch (#4) fittings typically rated >5000 psi
- Temperature ratings up to 287 ºC, depending on o-ring material
- Female threads are silver plated to prevent galling
- Test ports for leak checking
- No axial clearance needed for assembly

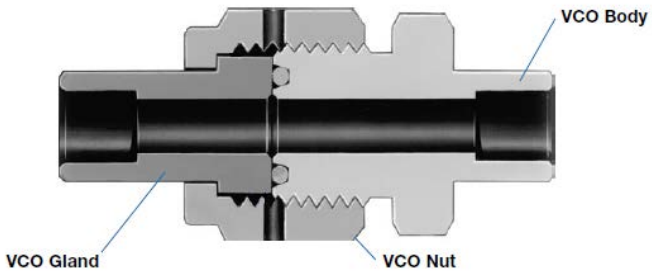

Second Day: Assemble Pressure System

Accomplishment – Assembly procedure has been completed and exercised

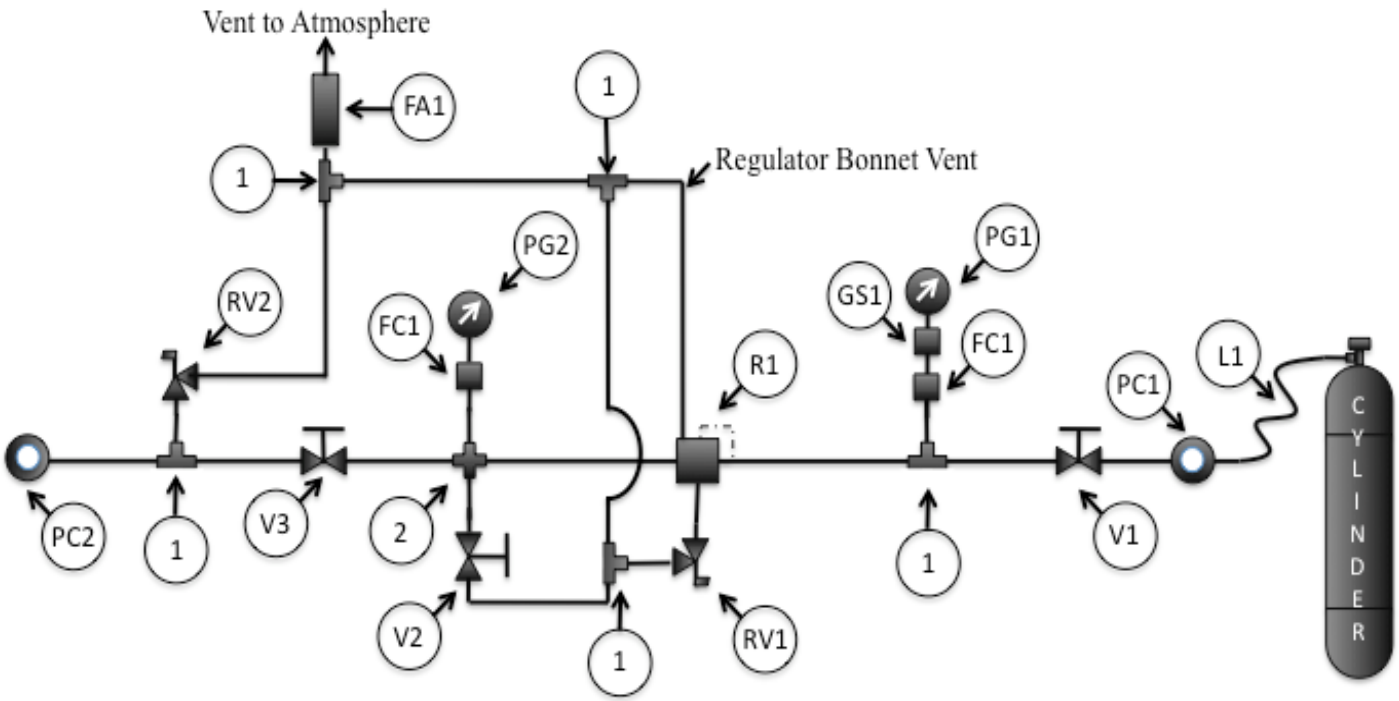

Mechanical Engineering Safety Note
Hands-on Hydrogen Safety Class Training Pressure Panel
MESN11-500018-AA

Second day: Planning, layout, component installation, tube cutting and bending, assembly, and leak testing

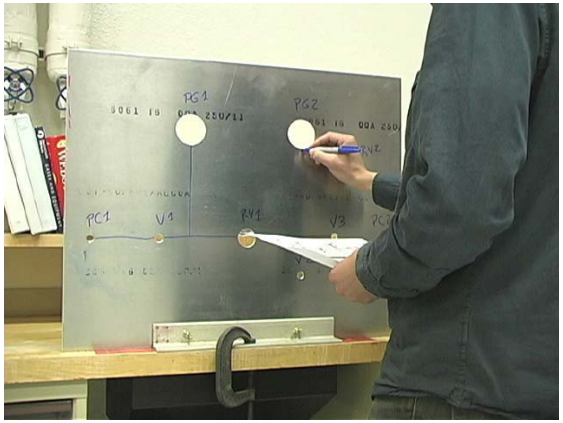

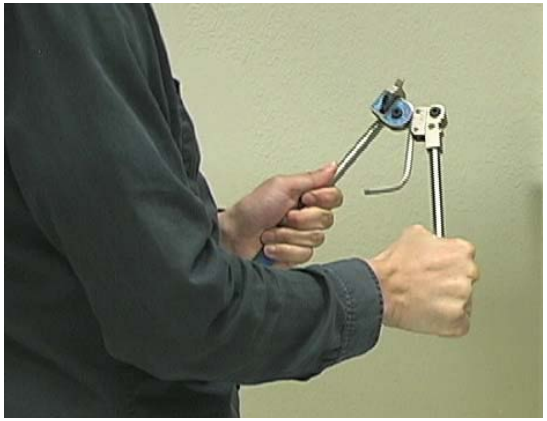

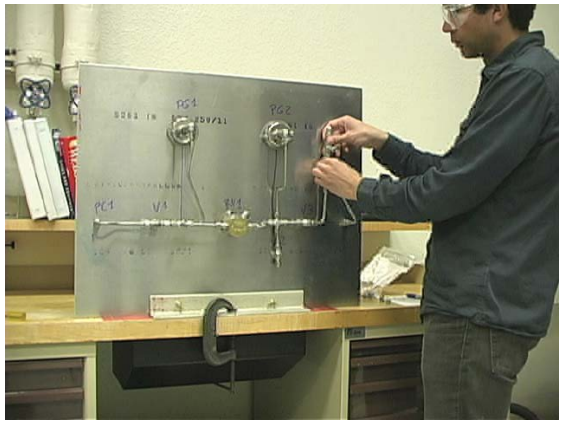

Third Day: Data acquisition setup, pressure testing in test cell, and system operation. Progress - These facilities are available at LLNL.

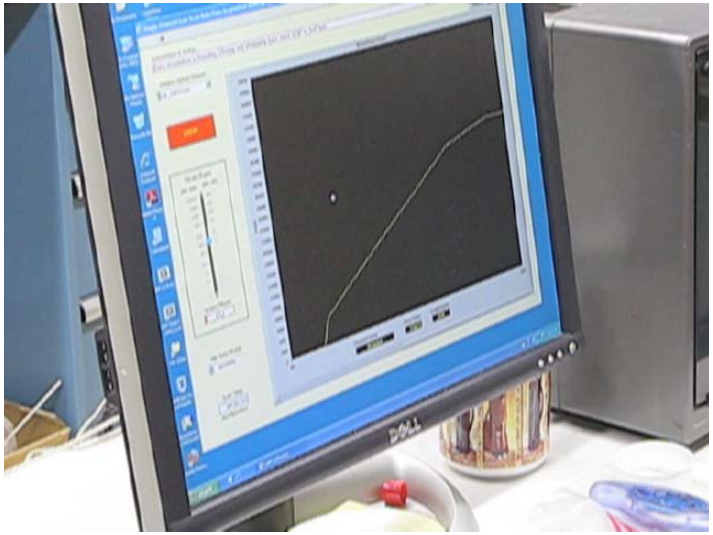

Responses to 2014 AMR reviewers' comments

The development of the hands-on training instruction seems too generic. While learning handling of high-pressure gases in general is useful and should not be eliminated, there needs to be some focus on hydrogen and how it differs physically and chemically from other gases, and what special care is necessary. We agree with this reviewer and intend to present hydrogen-specific information throughout the class whenever necessary due to hydrogen's unique properties.

Coordination with other entities doing similar work would be greatly beneficial. Agree. We were able to establish contacts with other institutions conducting safety training work during the FY14 AMR and we look forward to interacting with them to improve our training materials and plans.

The project should get a project vision and find out how to transition out of the laboratory. This valuable work is "hidden behind a fence." We intend to open the hands-on safety class to anybody interested in taking it. We believe LLNL is a good place to teach the class due to the existing expertise, facilities, and equipment, but will contemplate other options as the teaching phase of the class initiates and proceeds.

Collaborations

- **Hydrogen Safety Panel**
  - **Extensive peer review of web based class**
  - **Two rounds of reviews with 40 pages of comments**

Remaining Challenges and Barriers

- **Continuously update the technical and teaching aspects of training materials for web and hands-on courses to address fast moving and changing technologies**

- **Lack of resources to increase target audience by informing the hydrogen community of the availability of this training program**

Future work: Update web-based class and complete hands-on class

- *Maintain and continuously update web-based class*
  - *Keep up with changing technologies*
  - Incorporate comments and suggestions into the class
- *Complete preparation of hands-on class* by finalizing classroom instruction materials
- *Peer review hands-on class* by inviting members of DOE's safety panel and other H_2 safety experts to review class materials, class activities, facilities, and teaching approach
- *Teach hands-on class.* We envision 3-day sessions with up to 6 students. Instruction at other institutions possible if appropriate facilities exist
- Develop promotional materials to increase target audience

Technology transfer activities

- ***After completion of class materials (9/2015), hands-on class will be made available to interested individuals***
- ***Registration fee will pay for class materials and instructor's time.***

Summary

- ***Relevance -*** ***We are contributing to safe hydrogen operations*** **by developing instructional materials for researchers and operators**
- ***Approach***
  - ***Web-based class*** **addresses the need of laboratory researchers handling hydrogen www.h2labsafety.org**
  - ***Hands-on class*** **will present in-depth information for technical personnel tasked with installing and testing hydrogen systems**
- ***Accomplishments***
  - **400+ Web-based class completions**
  - **Completed 2 out of 5 sections of classroom materials for hands-on instructions**
- **Proposed Future Work**
  - **Complete and peer review hands-on class materials**